GATES INDUSTRIAL POWER TRANSMISSION

PREVENTIVE MAINTENANCE + SAFETY | 2019

DRIVEN BY POSSIBILITY™

OUR VISION

"CONTINUALLY PUSH THE BOUNDARIES OF MATERIALS SCIENCE TO ADVANCE THE WAY THE WORLD MOVES."

GATES. DRIVEN BY POSSIBILITY.

If it runs, we can help it run better. Gates is a global leader in power transmission and fluid power products and services. We serve customers across industries, bringing relentless innovation, and uncompromising quality to every product we make. Our reputation is built on over a century of experience, but everything we do is geared towards powering the future.

WHERE OTHERS SEE THE UNKNOWN, WE SEE POSSIBILITY.

In 1917, John Gates revolutionised industrial machinery with the world's first rubber V-Belt, and began the legacy of advanced design that defines The Gates Corporation. Gates' continuous product development has resulted in a comprehensive programme of V-belts, synchronous belts, tensioners, pulleys and complete drive systems covering a multitude of applications.

INNOVATION FUELED BY MATERIALS SCIENCE.

Change is a part of the Gates DNA. We never stand still, but are always looking for ways to meet emerging challenges head-on with solutions that accelerate our partners' growth and development. Poly Chain® GT Carbon™ Volt® is one of the latest innovations in Gates' synchronous belt range. This powerful polyurethane synchronous belt with patented carbon tensile cord design is suited for high torque, low speed drives.

COMMITTED TO YOUR BUSINESS.

Maintenance and repair downtime is inevitable, but unintended downtime is expensive. Every minute of it is directly reflected in the bottom line. Fortunately, when it comes to belt drives, unplanned production standstills can often be prevented by taking the right approaches to inspection, maintenance and replacement.

This manual has been designed as a guide to help you properly install and maintain Gates® industrial belts - reducing costly downtime and improving productivity.

TABLE OF CONTENTS

1. Why you should use this preventive maintenance manual
Components of a good maintenance programme 6
Sources of drive problems 7

2. How to maintain a safe working environment
Safety first! 9
Ensure safety during belt drive inspection and maintenance 10

3. How to properly install a belt drive
Belt identification 13
How to select the appropriate belt type 13
V-belts | belt sections & nominal dimensions 17
Synchronous belts | belt sections & nominal dimensions 19
Belt length finder & length conversion table 22
Belt storage 24
General guidelines on belt storage and handling 24
Methods of belt storage 25
Effects of belt storage 26
Belt and pulley installation 27
V-belt installation 27
Synchronous belt installation 29
Checking belt tension 31
Pulley installation & alignment 37
Upgrading drive performance 38
Improving poor drive performance & noise problems 39

4. How to maintain an effective preventive maintenance programme
When & how often to inspect your drive 42
Routine preventive maintenance | Quick drive inspection 43
Complete shutdown inspections | Preventive maintenance step by step 44

5. How to diagnose and resolve belt drive problems
Troubleshooting checklist 48
Troubleshooting methods 49
Problems on V-belt drives 50
Problems on synchronous belt drives 53

6. Technical data
Cross reference list V-belts 56
Cross reference list synchronous belts 60
V-belt groove dimensions 64
Micro-V® belt groove dimensions 66
PolyFlex® (JB™) groove dimensions 67
Synchronous pulley groove 68
Minimum recommended idler diameters 70
Minimum installation and take up allowance 73
Synchronous belt tolerance 76
Use and positioning of idlers 77
Chain to belt conversion 80
Drive survey worksheet 82
Gates design IQ data worksheet 83

7. How Gates makes your job easier
Gates tools 86
Analytical tools 88
How Gates supports your business 89

1. WHY YOU SHOULD USE THIS PREVENTIVE MAINTENANCE MANUAL

DRIVEN BY POSSIBILITY™

When properly maintained and used under normal conditions, a well-designed industrial belt drive is capable of operating for several years. The potential for long service life is built into every Gates belt.

- Gates synchronous belts and premium V-belts like Quad-Power® 4 & Predator® are **Service-Free**.
- Standard V-belts require a **regular maintenance programme** for a long period of trouble free operation.

Preventive maintenance helps you to avoid expensive failures and ensures optimum belt drive performance, maximising productivity - making it a shrewd investment.

A complete and effective maintenance programme should include following elements:

- Maintaining a safe working environment;
- Proper belt installation procedures;
- Regular belt drive inspections;
- Belt product knowledge;
- Belt drive performance evaluations;
- Troubleshooting.

All these aspects will be dealt with in the different sections of this manual.

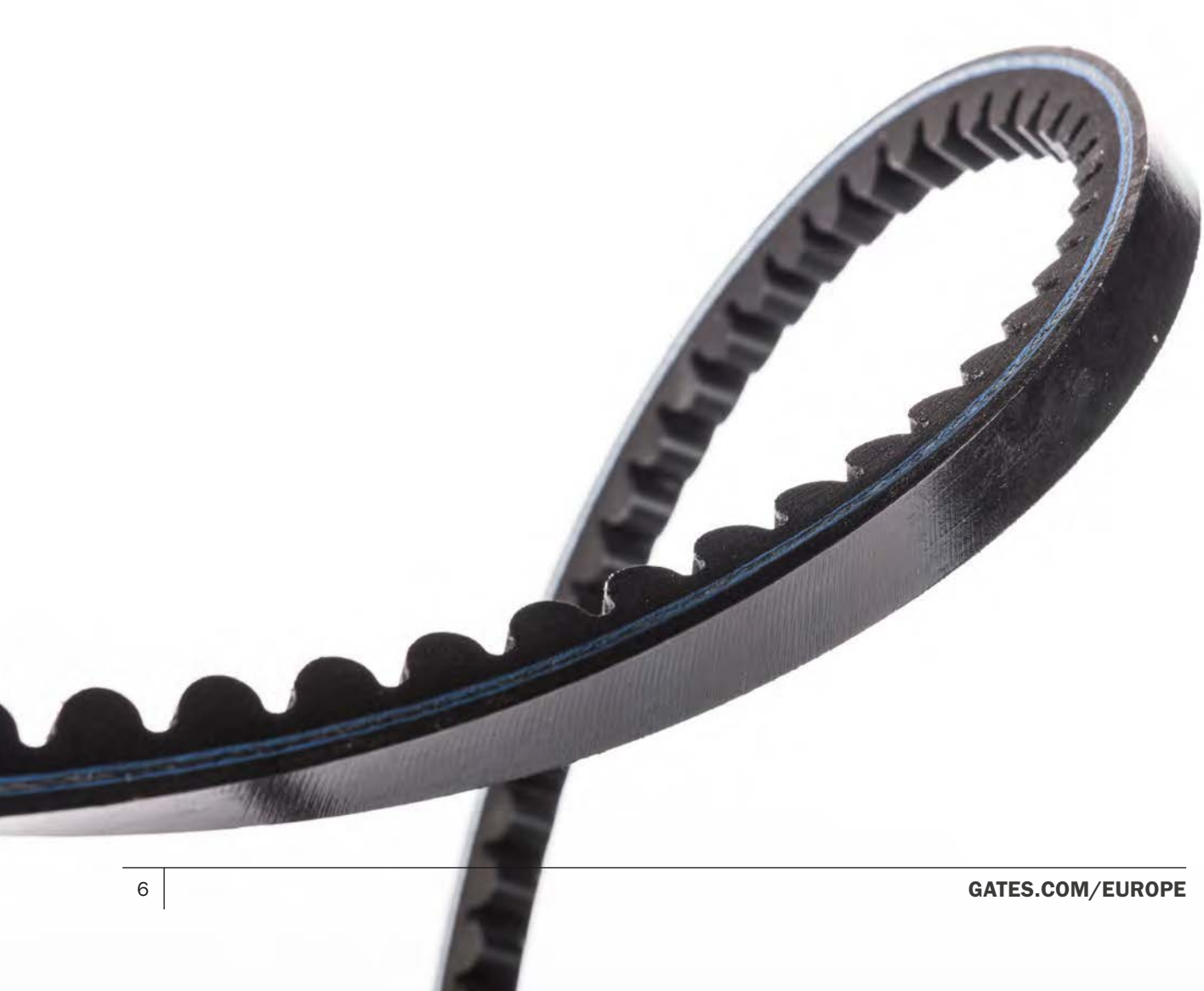

WHY PREVENTIVE MAINTENANCE?

SOURCES OF DRIVE PROBLEMS

When compared to chain drives (with constant lubrication problems), or gear drives (with mechanical problems and high costs), belt drives are the most cost-effective and reliable means of power transmission. This reliability can however only be obtained when belts and drives are properly maintained.

The main reason for belt drive problems is improper maintenance:

Improper maintenance

- No retensioning
- Not replacing worn pulleys
- Not cleaning guards
- Not checking for weak drive structure and components.
- Not checking alignment

Poor drive design

- Sub-minimal pulley diameters
- Under-designed drive
- Over-designed drive
- Excessive rim speed
- Incorrect belt type

Improper installation

- Rolling or prying on belts
- Mis-alignment
- Incorrect belt tension
- Mis-matched belts and/or pulleys used
- Guard interference

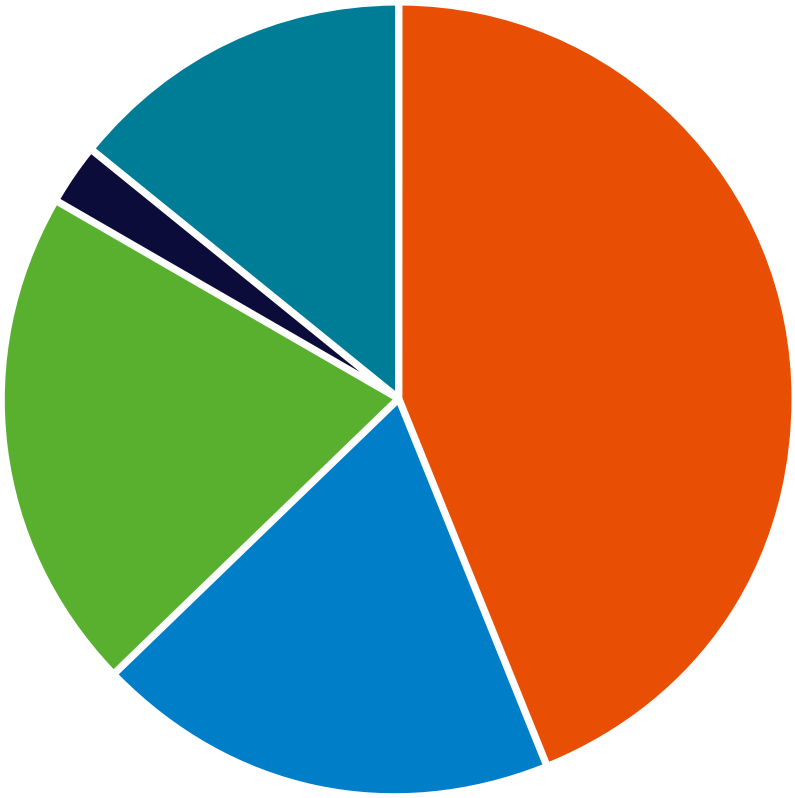

Improper storage and handling

- Temperature
- High humidity
- Storing belts for too long
- Too near ozone generating equipment
- Exposed to direct sunlight

Environmental factors

- Dust
- Debris
- Water / humidity
- Oil / grease
- Heat / cold
- Chemicals

2. HOW TO MAINTAIN A SAFE WORKING ENVIRONMENT

DRIVEN BY POSSIBILITY™

Warning! Be Safe! Gates belt drive systems are very reliable when used safely and within Gates application recommendations. However, there are specific USES THAT MUST BE AVOIDED due to the risk of serious injury or death. These prohibited misuses include:

PRIMARY IN-FLIGHT AIRCRAFT SYSTEMS

Do not use Gates belts, pulleys or sprockets on aircraft, propeller or rotor drive systems or in-flight accessory drives. Gates belt drive systems are not intended for aircraft use.

LIFT SYSTEMS

Do not use Gates belts, pulleys or sprockets in applications that depend solely upon the belt to raise/lower, support or sustain a mass without an independent safety backup system. For applications requiring special “Lift” or “Proof” type chains with minimum tensile strength or certified/test tensile strength requirements, be advised that because Gates belts have different drive design procedures from metal chains, the tensile strength of a belt when compared to the tensile strength of a chain should only be a part of the design process. Diligent analysis with the customer’s participation should be used when considering any such application.

BRAKING SYSTEMS

Do not use Gates belts, pulleys or sprockets in applications that depend solely upon the belt to slow or stop a mass, or to act as a brake without an independent safety backup system. Gates belt drive systems are not intended to function as a braking device in “emergency stop” systems.

HOVERCRAFT SYSTEMS

Gates products are not designed, manufactured, or tested for use on hovercraft applications. Buyer has the sole responsibility for the selection and testing of products for any intended use.

A SAFE WORKING ENVIRONMENT

ENSURE SAFETY DURING BELT DRIVE INSPECTION AND MAINTENANCE

It is common sense to establish a safe working environment in and around your belt drives. Besides making maintenance easier, the following precautions will ensure safety for the operator:

1. TRAINED PERSONNEL

Always have trained personnel working on your belt drives.

2. ALWAYS TURN EQUIPMENT OFF

Turn off the power to the drive, isolate the drive (Lock Out / Tag Out) before you start working, even if you are going for a brief inspection. Lock the control box, tag it with a warning sign and keep the key in your pocket. For added safety, and if possible, remove fuses. Inspecting the drive usually involves watching the machine running - but never touch it before it stops.

3. CHECK POSITION OF COMPONENTS

Make sure all machine components are in a “safe” position. Place fly-wheels, counterweights, gears and clutches in a neutral position to avoid accidental movements. Always follow the manufacturer’s recommendations for safe maintenance practices.

4. WEAR PROPER CLOTHING

Wear proper clothing and use personal protective equipment before working on the machine.

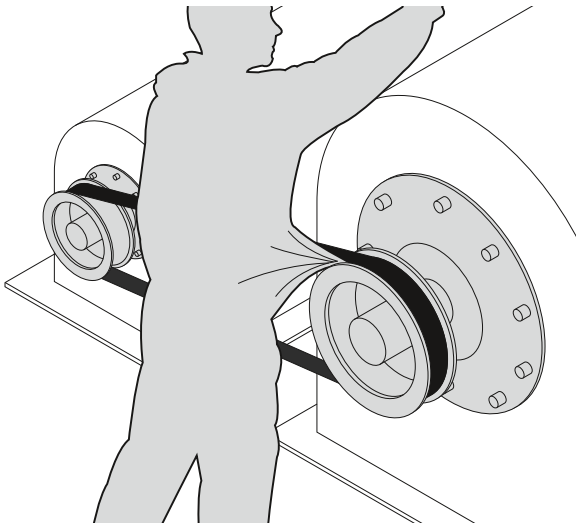

5. MAINTAIN SAFE ACCESS TO THE DRIVES

Maintain a safe access to the drives. Floors should be clean and free of oil and debris to ensure good footing and balance of the operator whilst working on the machine.

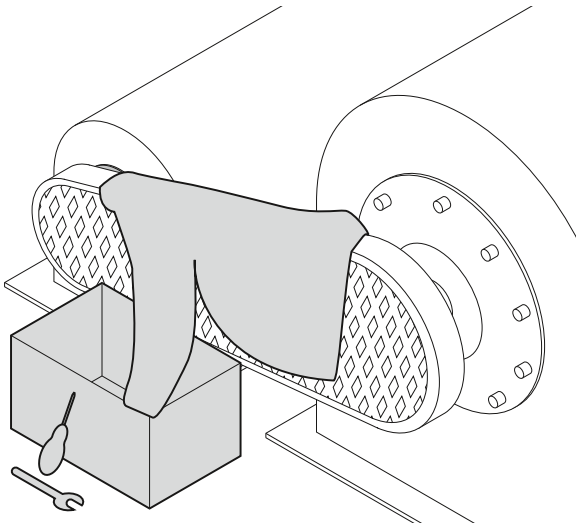

6. DRIVE GUARDS

Every belt drive must be completely guarded while in operation. Guards should only be removed for purpose of maintenance or repair.

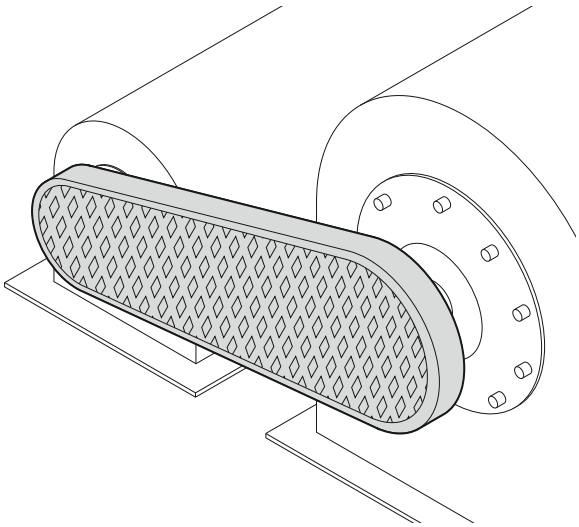

A properly designed guard has following features:

- it completely encloses the drive;
- it is equipped with grills or vents for good ventilation;
- the size of the openings must be adequate, i.e. small enough to prevent “pinch points”;
- it is preferably equipped with an automatic shut-off device which deactivates the drive as soon as the guard is removed;
- it has accessible inspection doors or panels;
- it can easily be removed and replaced if damaged;
- where necessary, it should protect the drive from weather, debris and damage.

7. TEST RUN

Before you put your drive back into normal operation, have a “test run” to check whether everything functions normally. Make all verifications necessary and take corrective action if needed.

3. HOW TO PROPERLY INSTALL A BELT DRIVE

DRIVEN BY POSSIBILITY™

Correct installation is crucial to ensure optimum performance and life span of your belt drives, and this can only be obtained when the belts drives are correctly designed and installed. The information on the following pages will help you become familiar with the belt types used in industry.

V-BELTS

Narrow section

- High power capacity V belt used to substantially reduce drive costs and minimize space requirements.
- Capable across the complete range of drive Kilowatt ratings, with fewer belts required compared to Classical section.
- Belt sizes are specified as: SPZ/3V, SPA, SPB/5V, SPC and 8V.
- These belts are found in the following Gates products: Gates Predator®, Gates Super HC® and Delta Narrow™ V-belts.

Classical section

- Original style V belts used in heavy duty applications.
- Belt sizes are specified as: Z, A, B, C, D or E.
- These belts are found in the following Gates products: Hi-Power® and Delta Classic™ V-belts.

Wrapped and Raw edge belt

- Wrapped belts, also called enveloped or covered belts, have a fabric cover with concave sidewalls, rounded bottom corners and arched tops.
- Raw edge belts have no fabric cover, straight ground sidewalls and special molded notches on the inside. The notches reduce bending stress which allows belts to run in smaller diameter pulleys comparable to wrapped belts. Raw Edge belts offer improved efficiency compared to wrapped belts.

Gates offers raw edge V belts in both the classical and narrow sections:

- Tri-Power® is a classical section raw edge, molded notch belt, available in AX, BX and CX profiles. Its length is specified by the same standard belt number as other classical section belts.
- Quad-Power® 4 Service-Free is a narrow section raw edge belt available in XPZ/3VX, XPA, XPB/5VX and XPC profiles.
- Super HC® MN in also a narrow section raw edge belt available in SPZ-MN, SPA-MN, SPB-MN and SPC-MN profiels.

In all cases, an “X” is used in the belt description to designate a molded notch construction. For example: AX26 is a raw edge, molded notch classical section belt and XPB2990/5VX1180 is a narrow section, raw edge, molded notch belt with a datum length of 2990 mm or 118” outside circumference.

Joined belts/PowerBand®

- PowerBand® belts were developed by Gates for drives subjected to pulsating loads, shock loads or extreme vibrations where single belts could flip over on the pulleys. A high-strength tie band permanently joins two or more belts to provide lateral rigidity. This keeps the belts running in a straight line in the pulley grooves.
- Gates PowerBand® construction is offered in:
  - Hi-Power® classical section wrapped B, C, D profiles.
  - Super HC® narrow section wrapped SPB, SPC, 3V/9J, 5V/15J, 8V/25J profiles.
  - Predator® PB narrow section wrapped SPBP/5VP, SPCP, 8VP profiles.
  - Quad-Power® 4 PowerBand® Service-Free narrow section raw edge XPZ, XPA, XPB, 3VX, 5VX profiles.
- Service-Free V-belt products available from Gates, in single and PowerBand®:
  - Predator®
  - Quad-Power® 4

Light duty belts

- These are used on heavy duty drives and are designed for use with backside idlers.
- Belt sizes are specified as: 3L, 4L, 5L profiles.
- These belts are found in the Gates PoweRated® range.
- PoweRated® V-belts specified by cross section and outside circumference, and is available in 3L, 4L & 5L profiles. This special belt is designed for clutching, heavier shock-load and backside idler drives, and is recognized by its distinct green colour. Reinforced with an aramid fibre tensile cord (weight for weight stronger than steel).
- PoweRated® belts can be interchange with Truflex®, but Truflex® cannot interchange with PoweRated®.

Dubl-V belts

This is a special version of Gates Hi-Power® for serpentine drives where power is transmitted by both the top and bottom of the belt. Dubl-V belts are specified by AA, BB, CC or DD cross sections, and by effective length.

PolyFlex® JB™ belts

- Polyflex® is a unique belt with a distinctive 60° belt angle and ribbed top specifically designed for long life in small diameter sheave drives. Polyflex® JB™ is ideal for compact drives, drives with high speed ratios, and drives requiring especially smooth operation.
- The "JB" refers to the belt's configuration: two, three or more belts joined together to provide extra stability and improved performance. This joined belt style should be used instead of matched single belts whenever possible.
- Polyflex® JB™ belts are ideal for these applications:
  - Milling, grinding or drilling machines
  - Lathes
  - Machine spindle drives
  - Centrifuges
  - Blowers
  - High speed compressors

Polyflex® JB™ belts are specified by top width and effective length and available in 3M (JB), 5M(JB), 7M(JB) and 11M(JB).

V-ribbed belts or Micro-V®

- Gates Micro-V® belts outperform other V-ribbed belts because the tips of the "V" are truncated (shorter). This shorter profile gives the new Micro-V® belts increased flexibility, reduced heat build-up and allows them to operate at extra high speeds on smaller diameter sheaves.

  Additional advantages of the truncated tips are:

  1. belt does not bottom in the sheave; therefore providing a higher degree of wedging
  2. belt can better tolerate debris in the sheave groove
  3. belt can be used on flat DriveN pulleys.
- Gates Micro-V® are extremely smooth running and highly resistant to oil, heat and other adverse conditions.
- Gates Micro-V® are belts are available for industrial applications in the following profiles: PJ, PK, PL and PM.

Multi- Speed belts (Variable Speed Drives)

Multi-Speed belts have a distinct shape. Multi-Speed belt top widths are usually greater than their thicknesses. This permits a greater range of speed ratios than standard belts. Usually cogged or notched on the underside, Multi-Speed belts are specified for equipment which requires changes in DriveN speed during operation.

Gates Multi-Speed belts are specified by top width, outside circumference, and the required groove angle. The groove angle can be measured from the drive pulleys.

SYNCHRONOUS BELTS

These belts are also known as timing or positive drive belts and are used where DriveN shaft speeds must be synchronized to the rotation of the DriveR shafts. They can also be used to eliminate noise and maintenance problems caused by chain drives.

PowerGrip® and Poly Chain®

Synchronous belts, such as Gates Poly Chain® Carbon™ Volt®, can be used in high Kilowatt, high torque drives, drives where space is severely limited and where there is limited take up.

Synchronous drives are extremely efficient - typically 98% with properly maintained Poly Chain® Carbon™ Volt® or PowerGrip® GT3 systems. By contrast, chain drives are in the 91-98% efficiency range, while V-belts average in the 93-98% range.

Synchronous belts are available in a range of distinctive tooth profiles, various sizes and constructions to meet a wide range of application requirements. The important dimensions of synchronous belts are: belt pitch, belt pitch length, width and tooth profile.

- Belt Pitch - Distance in millimetres or inches between two adjacent tooth centers as measured on the belt's pitch line.
- Belt Pitch Length - Circumference in millimetres or inches as measured along the pitch line.
- Width - Top width in millimetres or inches.
- Tooth Profile - See the Belt Identification section for the easiest way to identify tooth profile. Synchronous belts run on pulley, which are specified by the following:
- Pitch - Distance between groove centres, measured on the pulley pitch circle. The pitch circle coincides with the pitch line of the mating belt.

Gates synchronous belts are available in Poly Chain® Carbon™ Volt®, PowerGrip® GTX, PowerGrip® GT3, PowerGrip® HTD®, PowerGrip®, Twin Power®, Long Length.

POLYURETHANE BELTS

Gates' standard Synchro-Power® product range covers a multitude of applications. If your process requires a belt design that meets very specific application needs, Gates offers you a variety of customised polyurethane belt products next to the standard belt range. These polyurethane belt products, tailor-made to fulfil your most challenging requirements, meet the same quality levels as their standard counterparts. Our applications engineers can work with you to design any belt catering to your specific needs in various applications. Nearly every belt type can be customised by adding backings, profiles or special machining. This makes them the perfect supplement to the Gates' standard Synchro-Power® product offering.

STATIC CONDUCTIVE BELTS

Static discharge can pose a hazard on belt drives that operate in potentially explosive environments. Static conductivity is a required belt characteristic in order to prevent static discharge and to comply with the ATEX directive for use of belts in explosive environments.

V-belts are generally manufactured to be static conductive in accordance with the ISO1813. Gates Hi-Power® (PowerBand®), Tri-Power®, Super HC® (PowerBand®), Super HC® MN, Quad-Power® 4 (PowerBand®), Predator® (PowerBand®), Micro-V®, are all static conductive when new as defined by ISO1813 and can be used in conditions as described in the directive 2014/34/EU-ATEX.

Synchronous belts Poly Chain® Carbon™ Volt® 8MGTV and 14MGTV, PowerGrip® GTX 8MX and 14MX, PowerGrip® GT3 8MGT and 14MGT, and PowerGrip® HTD® 14M belts are conductive as defined by ISO9563 and can be as such used in conditions as described in the directive 2014/34/EU-ATEX.

PowerGrip® HTD® 3M, 5M, 8M, 20M, PowerGrip® Timing, Poly Chain® GT, Poly Chain® GT2, Poly Chain® GT Carbon™, Mini Poly Chain® GT Carbon™, Polyflex®, Polyflex® JB™, PoweRated®, Micro-V® PK and Predator® (PowerBand®) 8VP belts are not considered to be static conductive.

When a belt is used in a hazardous environment, additional protection must be employed to assure that there are no accidental static spark discharges. The portion of the belt that contacts the sheave or sprocket must be conductive to ensure that static charge is conducted into the drive hardware. V-belts must have a static conductive sidewall in contact with a conductive sheave. Synchronous belts must have a static conductive tooth surface in contact with a conductive sprocket.

Unusual or excessive debris or contaminant on the belt contact surface or sheave or sprocket grooves should be cleaned and removed. Wrapped V-belts (V-belts with a fabric bandply on the driving surface) should be inspected for bandply wear. If the fabric bandply on the belt sidewall has worn away, the belts should be replaced immediately. Raw edge V-belts do not have to be replaced if wear is evident on the belt sidewall. If there are any doubts about the belt's physical condition and its static conductivity characteristics, replace the belt.

Any belt drive system, whether it uses a synchronous belt or V-belt, that operates in a potentially hazardous environment must be properly grounded. A continuous conductive path to ground is necessary to bleed off the static charge. This path includes a static conductive belt, a conductive sheave or sprocket, a conductive bushing, a conductive shaft, conductive bearings, and the ground.

DISCOVER THE ENTIRE PRODUCT RANGE IN THE GATES INDUSTRIAL POWER TRANSMISSION CATALOGUE
(E2/20211)

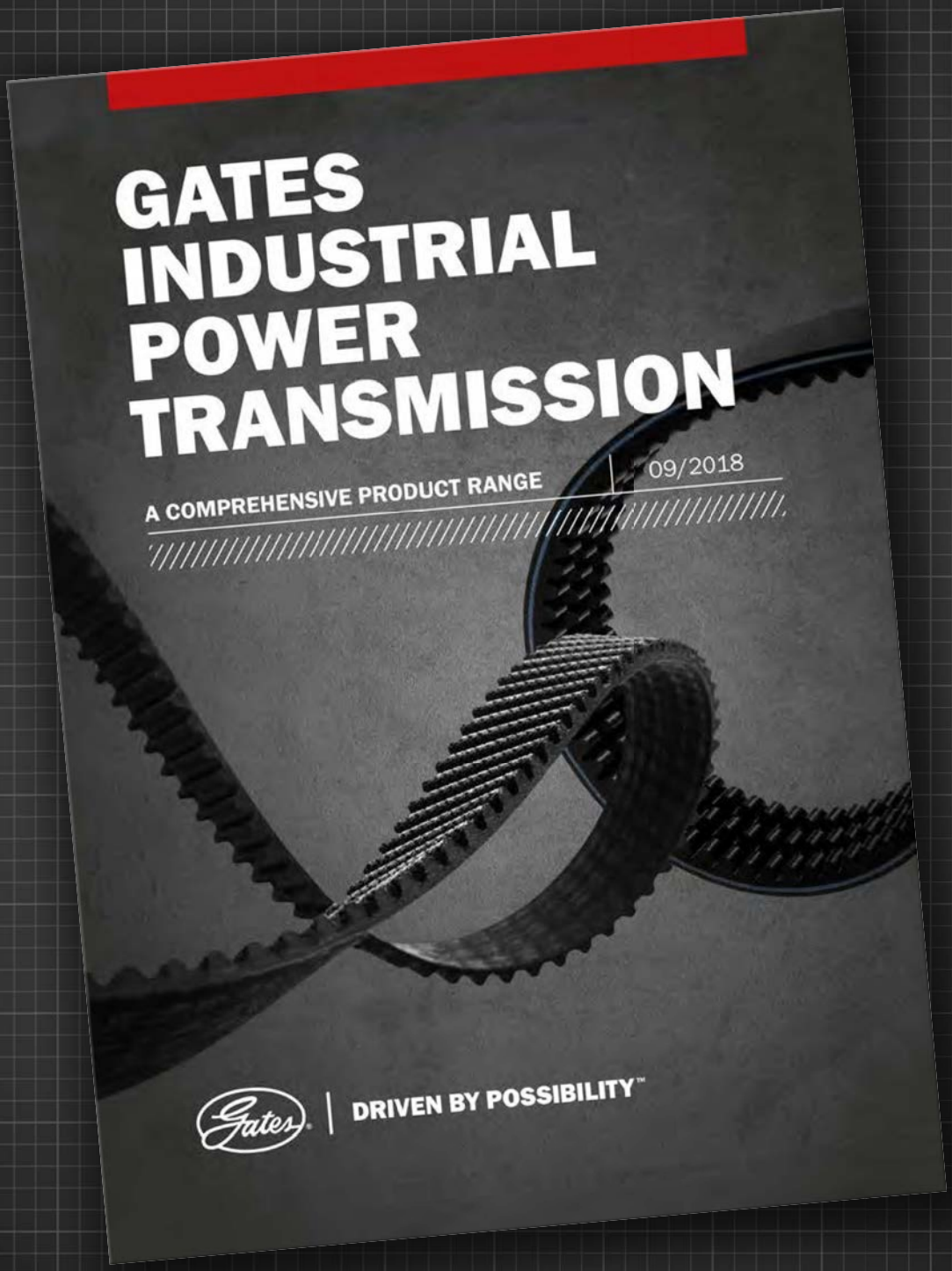

DRIVEN BY POSSIBILITY™

PREDATOR®

Wrapped, narrow section/classical section V-belt

	WIDTH mm	HEIGHT mm
SPBP/5VP	16	13
SPCP	22	18
8VP	26	23

QUAD-POWER® 4

EPDM, raw edge, moulded notch, narrow section V-belt

	WIDTH mm	HEIGHT mm
XPZ/3VX	10	8
XPA	13	10
XPB/5VX	16	13
XPC	22	18

SUPER HC® MN

Raw edge, moulded notch, narrow section V-belt

	WIDTH mm	HEIGHT mm
SPZ-MN	10	8
SPA-MN	13	10
SPB-MN	16	13
SPC-MN	22	18

SUPER HC®

Wrapped, narrow section V-belt

	WIDTH mm	HEIGHT mm
SPZ/3V	10	8
SPA	13	10
SPB/5V	16	13
SPC	22	18
8V	26	23

TRI-POWER®

EPDM, raw edge, moulded notch, classical V-belt

	WIDTH mm	HEIGHT mm
AX	13	8
BX	17	11
CX	22	14

HI-POWER®

Wrapped, classical section V-belt

	WIDTH mm	HEIGHT mm
Z	10	6
A	13	8
B	17	11
C	22	14
D	32	19
E	38	23

DELTA CLASSIC™

Wrapped, classical section V-belt

	WIDTH mm	HEIGHT mm
Z	10	6
A	13	8
B	17	11
C	22	14
D	32	19

DELTA NARROW™

Wrapped, narrow section V-belt

	WIDTH mm	HEIGHT mm
SPZ/3V	10	8
SPA	13	10
SPB/5V	16	13
SPC	22	18

PREDATOR® POWERBAND®

Wrapped, narrow section multiple V-belt

	WIDTH mm	HEIGHT mm	PITCH mm
SPBP	16	13	19.00
SPCP	22	18	25.50
5VP/15JP	16	13	17.50
8VP/25JP	26	23	28.60

QUAD-POWER® 4 POWERBAND®

Raw edge, moulded notch, narrow section multiple V-belt

	WIDTH mm	HEIGHT mm	PITCH mm
XPZ	10	8	12.00
XPA	13	10	15.00
XPB	16	13	19.00
3VX	10	8	10.30
5VX	16	13	17.50

SUPER HC® AND HI-POWER® POWERBAND®

Wrapped, narrow section/classical section multipleV-belt

	WIDTH mm	HEIGHT mm	PITCH mm
SPB	16	13	19.00
SPC	22	18	25.50
3V/9J	10	8	10.30
5V/15J	16	13	17.50
8V/25J	26	23	28.60
B	17	10	19.05
C	22	12	25.40
D	32	19	36.50

HI-POWER® DUBL-V

Wrapped, classical section double sided V-belt

Wrapped, narrow section/classical section multiple V-belt

	WIDTH mm	HEIGHT mm
AA	13	10
BB	17	14
CC	22	18
DD	32	25

POWERATED®

Wrapped, green textile V-belt

	WIDTH mm	HEIGHT mm
3L	3/8	7/32
4L	1/2	5/16
5L	21/32	3/8

POLYFLEX®

Polyurethane V-belt

	WIDTH mm	HEIGHT mm
3M	3	2.28
5M	5	3.30
7M	7	5.33
11M	11	6.85

POLYFLEX® JB™

Polyurethane multiple V-belt

	WIDTH mm	HEIGHT mm	PITCH mm
3M-JB	3	2.28	3.35
5M-JB	5	3.30	5.30
7M-JB	7	5.33	8.50
11M-JB	11	7.06	13.20

MICRO-V®

Multi-ribbed V-belt

	HEIGHT mm	PITCH mm
PJ	3.50	2.34
PK	4.45	3.56
PL	9.50	4.70
PM	16.50	9.40

As described in the ISO standards, nominal dimensions define the pulleys for which these belts are suitable.

They do not represent the exact belt size. These are determined by the belt construction and are Gates proprietary.

POLY CHAIN® CARBON™ VOLT®

Anti-static polyurethane synchronous belt with patented carbon tensile cords and an optimised curvilinear tooth

	PITCH mm	TOTAL HEIGHT mm	TOOTH HEIGHT mm
8MGTV	8	5.90	3.40
	PITCH mm	**TOTAL HEIGHT mm**	**TOOTH HEIGHT mm**
14MGTV	14	10.20	6.00

POLY CHAIN® CARBON GT

Polyurethane synchronous belt with patented carbon tensile cords

	PITCH mm	TOTAL HEIGHT mm	TOOTH HEIGHT mm
5MGT	5	3.81	1.93

POLY CHAIN® GT2

Polyurethane synchronous belt

	PITCH mm	TOTAL HEIGHT mm	TOOTH HEIGHT mm
8MGT	8	5.90	3.40
14MGT	14	10.20	6.00

POWERGRIP® GTX

Rubber synchronous belt with high strength glass cord

	PITCH mm	TOTAL HEIGHT mm	TOOTH HEIGHT mm
8MX	8	5.6	3.4
14MX	14	10	6

POWERGRIP® GT3

Rubber synchronous belt with optimised GT tooth profile

	PITCH mm	TOTAL HEIGHT mm	TOOTH HEIGHT mm
2MGT	2	1.52	0.71
3MGT	3	2.41	1.12
5MGT	5	3.81	1.92
8MGT	8	5.60	3.40
14MGT	14	10.00	6.00

POWERGRIP® HTD®

Rubber synchronous belt with HTD® tooth profile

	PITCH mm	TOTAL HEIGHT mm	TOOTH HEIGHT mm
3M	3	2.40	1.20
5M	5	3.80	2.10
8M	8	5.6	3.40
14M	14	10.00	6.10
20M	20	13.20	8.40

POWERGRIP®

Classical synchronous belt

	PITCH Inches	PITCH mm	TOTAL HEIGHT mm	TOOTH HEIGHT mm
MXL	2/25 (0.080")	2.032	1.14	0.51
XL	1/5 (0.200")	5.08	2.30	1.27
L	3/8 (0.375")	9.525	3.50	1.91
H	1/2 (0.500")	12.7	4.00	2.29
XH	7/8 (0.875")	22.225	11.40	6.36
XXH	1 1/4 (1.250")	31.75	15.20	9.53

TWIN POWER®

Double-sided synchronous belt

	PITCH mm	TOTAL HEIGHT mm	TOOTH HEIGHT mm
PowerGrip® GT2			
8MGT	8	8.80	3.40
14MGT	14	15.34	5.82
PowerGrip® HTD®			
5M	5	5.70	2.10
PowerGrip® CTB			
XL	1/5 inch	3.05	1.27
L	3/8 inch	4.58	1.91
H	1/2 inch	5.95	2.29

LONG LENGTH

Open-end synchronous belt

	PITCH mm	TOTAL HEIGHT mm	TOOTH HEIGHT mm
Poly Chain® GT Carbon™			
8MGT	8	5.90	3.40
14MGT	14	10.20	6.00
PowerGrip® GT			
2MR	2	1.52	0.71
3MR	3	2.41	1.12
5MR	5	3.81	1.92
8MR	8	5.60	3.34
PowerGrip® HTD®			
3M	3	2.40	1.10
5M	5	3.80	2.10
8M	8	6.00	3.40
14M	14	10.00	6.00
PowerGrip® CTB			
MXL	2.032	1.14	0.51
XL	5.08	2.30	1.27
L	9.525	3.60	1.91
H	12.7	4.30	2.29

SYNCHRO-POWER®

Open-end/endless polyurethane synchronous belt

T SERIES

Standard synchronous belts for conveying and moderate power transmission applications

	PITCH mm	TOTAL HEIGHT mm	TOOTH HEIGHT mm
T2.5	2.5	1.30	0.70
T5	5	2.20	1.20
T10	10	4.50	2.50
T20	20	8.00	5.00
DL-T5	5	3.30	1.20
DL-T10	10	6.80	2.50

AT SERIES

High strength synchronous belts for power transmission and high accuracy positioning applications

	PITCH mm	TOTAL HEIGHT mm	TOOTH HEIGHT mm
AT5	5	2.70	1.20
AT10	10	4.50	2.50
AT20	20	8.00	5.00

ATL SERIES

Special linear drive belts with extra reinforced steel tensile cords designed for the highest strength and accuracy

	PITCH mm	TOTAL HEIGHT mm	TOOTH HEIGHT mm
ATL5	5	2.70	1.20
ATL10	10	4.80	2.50
ATL20	20	8.00	5.00

TRAPEZOIDAL SERIES

Standard synchronous belts with trapezoidal tooth profile for driving and conveying applications

	PITCH mm	TOTAL HEIGHT mm	TOOTH HEIGHT mm
XL	5.08	2.29	1.27
L	9.525	3.56	1.90
H	12.7	4.06	2.29
XH	22.225	11.18	6.35

HTD® SERIES

HTD® belts with curvilinear tooth profile with the benefits of advanced polyurethane and steel tensile cords

	PITCH mm	TOTAL HEIGHT mm	TOOTH HEIGHT mm
HTD 5M	5	3.60	2.10
HTD 8M	8	5.60	3.40
HTD 14M	14	10.00	6.00

STD SERIES

High strength open-end belts with the benefits of advanced polyurethane and steel tensile cords

	PITCH mm	TOTAL HEIGHT mm	TOOTH HEIGHT mm
STD 5M	5	3.30	1.90
STD 8M	8	5.10	3.00

BLACK FLAT SERIES

Polyurethane flat belt with steel reinforcement for conveying applications

	TOTAL HEIGHT mm
BFL20	2.00
BFL32	3.20
BFL38	3.80
BFL48	4.80

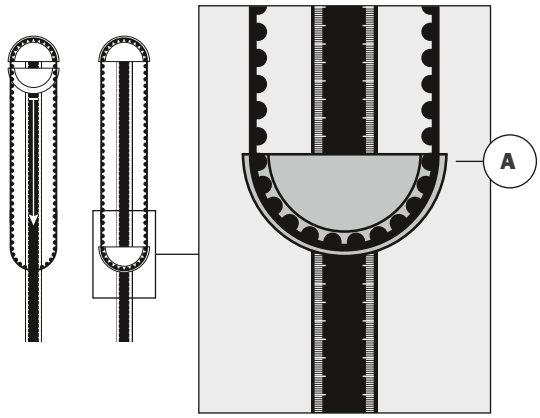

MEASURING RANGE

The length measuring instrument can be used for V-belts, Micro-V®-belts and timing belts. The inside length (Li) of the belt is to be measured each time (profile side inwards). Using the Length Conversion Table (page 23), the nominal length of the belt can be calculated from the measured inside length. The measuring range is from 600 to 4100 mm inside length.

MEASURING ACCURACY

The measured inside length only gives an indication of the length. The measurement is not suitable for precision length definition nor for length tolerance definition.

MEASURING PROCESS

A driving belt, which is to be measured, must be laid on the fixed metal dish and the movable part is to be moved until both belt stands are stretched. While doing this, the profile side of the belt must lie inwards (or side with the belt marking lays outwards). The inside length of the belt is to be read from the scale on the straight edge of the movable semicircle (**Point A**).

Profile	Dimension (width x height)	Standard	Length Definition	Pitch Width (mm)	Outside length La	Datum length Ld
Predator®						
SPBP	16 x 13	ISO	Datum Length, Ld	14	La ~ Ld + 22	Ld ~ Li + 60
SPCP	22 x 18			19	La ~ Ld + 30	Ld ~ Li + 83
Quad-Power® 4						
XPZ	10 x 8	ISO	Datum Length, Ld	8.5	La ~ Ld + 10	Ld ~ Li + 38
XPA	13 x 10			11	La ~ Ld + 15	Ld ~ Li + 45
XPB	16 x 13			14	La ~ Ld + 18	Ld ~ Li + 60
XPC	22 x 18			19	La ~ Ld + 30	Ld ~ Li + 83
Super HC® MN						
3VX	10 x 8	RMA	Effective Length, EL	-	EL	Li + 50
5VX	16 x 13				EL	Li + 80
Super HC® / Super HC® MN						
SPZ	10 x 8	ISO	Datum Length, Ld	8.5	La ~ Ld + 13	Ld ~ Li + 38
SPZ-MN					La ~ Ld + 10	Ld ~ Li + 38
SPA	13 x 10			11	La ~ Ld + 18	Ld ~ Li + 45
SPA-MN					La ~ Ld + 15	Ld ~ Li + 45
SPB	16 x 13			14	La ~ Ld + 22	Ld ~ Li + 60
SPB-MN					La ~ Ld + 18	Ld ~ Li + 60
SPC	22 x 18			19	La ~ Ld + 30	Ld ~ Li + 83
SPC-MN					La ~ Ld + 25	Ld ~ Li + 83
Super HC® / Delta Narrow™						
3V	10 x 8	RMA	Effective Length, EL	-	EL	Li + 50
5V	16 x 13				EL	Li + 80
8V	26 x 23				EL	Li + 145

BELT IDENTIFICATION

BELT LENGTH FINDER & LENGTH CONVERSION TABLE

Profile	Dimension (width x height)	Standard	Length Definition	Pitch Width (mm)	Outside length La	Datum length Ld
Tri-Power®						
AX	13 x 8	RMA	Effective Length, EL	-	La ~ Ld + 15	Ld ~ Li + 30
BX	17 x 11				La ~ Ld + 24	Ld ~ Li + 40
CX	22 x 14				La ~ Ld + 34	Ld ~ Li + 58
Hi-Power® / Delta Classic™						
Z	10 x 6	ISO	Datum Length, Ld	8.5	La ~ Ld + 19	Ld ~ Li + 22
10 mm		DIN	Inside Length, Li		La ~ Li + 40	Ld ~ Li + 22
A	13 x 8	ISO	Datum Length, Ld	11	La ~ Ld + 23	Ld ~ Li + 30
13 mm		DIN	Inside Length, Li		La ~ Li + 53	Ld ~ Li + 30
B	17 x 11	ISO	Datum Length, Ld	14	La ~ Ld + 32	Ld ~ Li + 40
17 mm		DIN	Inside Length, Li		La ~ Li + 70	Ld ~ Li + 40
C	22 x 14	ISO	Datum Length, Ld	19	La ~ Ld + 42	Ld ~ Li + 58
22 mm		DIN	Inside Length, Li		La ~ Li + 90	Ld ~ Li + 58
D	32 x 19	ISO	Datum Length, Ld	27	La ~ Ld + 59	Ld ~ Li + 75
32 mm		DIN	Inside Length, Li		La ~ Li + 120	Ld ~ Li + 58
Predator® PowerBand®						
SPBP-PB	16 x 15	ISO	Datum Length, Ld	14	La ~ Ld + 38	Ld ~ Li + 60
SPCP-PB	22 x 20			19	La ~ Ld + 46	Ld ~ Li + 83
Predator® PowerBand®						
5VP-PB	16 x 15	RMA	Effective length, EL	15.24	EL + 31	Ld ~ Li + 70
15JP		ISO			EL + 31	Ld ~ Li + 70
8VP-PB	26 x 26	RMA		25.4	EL + 38	Ld ~ Li + 125
25JP		ISO			EL + 38	Ld ~ Li + 125
Quad-Power® 4 PowerBand®						
XPZ-PB	10 x 8	ISO	Datum Length, Ld	8.5	La ~ Ld + 31	Ld ~ Li + 38
XPA-PB	13 x 10			11	La ~ Ld + 39	Ld ~ Li + 45
XPB-PB	16 x 13			14	La ~ Ld + 42	Ld ~ Li + 60
Super HC® MN PowerBand®						
3VX-PB	10 x 10	RMA	Effective Length, EL	8.89	EL + 16	Ld ~ Li + 45
5VX-PB	16 x 15			15.24	EL + 26	Ld ~ Li + 70
Super HC® PowerBand®						
SPB-PB	16 x 15	ISO	Datum Length, Ld	14	La ~ Ld + 38	Ld ~ Li + 60
SPC-PB	22 x 20			19	La ~ Ld + 46	Ld ~ Li + 83
Super HC® PowerBand®						
3V-PB	10 x 10	RMA	Effective Length, EL	8.89	EL + 20	Ld ~ Li + 45
9J		ISO			EL + 20	Ld ~ Li + 45
5V-PB	16 x 15	RMA		15.24	EL + 31	Ld ~ Li + 70
15J		ISO			EL + 31	Ld ~ Li + 70
8V-PB	26 x 26	RMA		25.4	EL + 38	Ld ~ Li + 125
25J		ISO			EL + 38	Ld ~ Li + 125
Hi-Power® PowerBand®						
B	17 x 11	RMA	Inside Length, Li	-	La ~ Ld + 32	Ld ~ Li + 40
C	22 x 14				La ~ Ld + 42	Ld ~ Li + 58
D	32 x 19				La ~ Ld + 59	Ld ~ Li + 75

BELT STORAGE

GENERAL GUIDELINES ON BELT STORAGE AND HANDLING

At times, premature belt failure can be traced to improper belt storage that damaged the belt before it was installed on the drive. Therefore, good preventive maintenance should not be limited to the actual belt drive operating on equipment, but should also include proper storage procedures.

Good quality belts retain their initial serviceability and dimensions under favourable storage conditions. On the other hand, unfavourable conditions can adversely affect performance and cause dimensional changes. By following a few common sense steps, good quality belts will retain their initial serviceability.

RECOMMENDED

- Store your belts in a cool and dry environment (5°C to 30°C and Relative Humidity <70%) and not in direct sunlight.
- When stacked on shelves, the stacks should be small enough to prevent distortion of the bottom belts.
- When stored in containers, the container size should be sufficiently limited for the same reason.

NOT RECOMMENDED

- Do not store belts on floors unless a suitable container is provided. They may be exposed to water leaks or moisture or be damaged due to traffic.
- Do not store belts near windows (sunlight / moisture).
- Do not store belts near radiators or heaters or in the air flow from heating devices.
- Do not store belts in the vicinity of transformers, electric motors, or other electric devices that may generate ozone.
- Avoid areas where evaporating solvents or other chemicals are present in the atmosphere.
- Do not store belts in a configuration that would result in bend diameters less than the minimum recommended pulley diameter for normal bends and less than 1.2 times the minimum recommended diameters for reverse bends (**see page 70 for minimum recommended diameters**).

Storage procedures are different depending on the belt type. Below suggestions will help you retain serviceability and dimensions for all belt types.

V-BELTS

V-belts are often stored on pegs. Very long belts should be stored on sufficiently large pins (of not less than the minimum bend diameter (**see page 70**), or crescent-shaped “saddles”, to prevent their weight from causing distortion. Long V-belts may be coiled in loops for easy distortion-free storage.

JOINED V-BELTS AND MULTI-RIBBED BELTS

Like V-belts, these belts may be stored on pins or saddles with precaution to avoid distortion. However, belts of this type up to approx. 3000 mm are normally shipped in a “nested” configuration, and it is necessary that especially joined V-belts be stored in a naturally relaxed form, and only nested or rolled up for transportation.

SYNCHRONOUS BELTS

For synchronous belts, nests are formed by laying a belt on its side on a flat surface and placing as many belts inside the first belt as possible without undue force, providing the belt bend radius is no smaller than the minimum recommended pulley size for that belt (**see page 72**). When tight, the nests can be stacked on a flat shelf, up to 8 nests high, without damage. Belts over approx. 3000 mm may be “rolled up” and tied for shipment, providing and bend radius is no smaller than the minimum recommended pulley for that belt. These rolls may be stacked for easy storage. Avoid small bend radii by inserting card tubes, the size of minimum bend radius for the belt, at the point where the bend is in the belt.

VARIABLE SPEED BELTS

These belts are more sensitive to distortion than most other belts. Hanging them from pins or racks is not recommended. These belts should be stored on shelves. Variable speed belts are often shipped in “sleeves” slipped over the belt. They should be stored on shelves in these sleeves. If they are shipped “nested”, untie the nests and store them in a relaxed position.

The quality of belts has not been found to change significantly within 7 years of proper storage at temperatures up to 30°C (86°F) and relative humidity below 70%. Also there must be no exposure to direct sunlight. Ideal storage conditions are between 5°C (41°F) and 30°C (86°F).

If storage temperature exceeds 30°C (86°F), the storage time will be reduced and belt service levels could also be significantly reduced. Under no circumstances should storage temperatures be allowed to exceed 46°C (115°F).

If there is a significant increase in humidity levels, it is possible for fungus or mildew to form on stored belts. This does not appear to cause serious belt damage but should be avoided if possible.

For equipment fitted with a belt drive that is left idle for long periods, i.e. 6 months or more, it is recommended that the tension on the belts is relaxed during such periods. Equipment storage conditions should be consistent with the guidelines for belt storage. If this is impossible, remove the belts and store them separately.

Belt cross section	Belt length (mm)	Coils	Loops
Z, A, B; SPZ/3V; XPZ/3VX; XPA; AX; AA; 3L, 4L, 5L	<1500	0	1
	1500-3000	1	3
	3000-4600	2	5
	>4600	3	7
C; SPB/5V; SPC; XPB/5VX; CX; BB	<1900	0	1
	1900-3700	1	3
	3700-6000	2	5
	>6000	3	7
D; CC	<3000	0	1
	3000-6100	1	3
	6100-8400	2	5
	8400-10600	3	7
	>10600	4	9
8V	<4600	0	1
	4600-6900	1	3
	6900-9900	2	5
	9900-12200	3	7
	>12200	4	9

V-belt drives run longer and perform better if they are given the proper care and attention during installation, and in particular, during the following 24-hour running-in period. This is a most critical time for V-belts. The best practices provided here give you a standardised procedure for correctly installing a V-belt. This procedure provides general guidelines and is intended to support any technical literature that may have been supplied by the equipment manufacturer.

STEP 1 - SECURE THE DRIVE

After the power has been turned off, then remove the guard, isolate the drive (Lock Out / Tag Out), loosen the motor mounting bolts. Move the motor until the belt is slack and it can be removed without prising. Never prise off a belt!

STEP 2 - REMOVE OLD BELTS

Check them for unusual wear. Excessive wear may indicate problems with drive design or maintenance procedures.

STEP 3 - SELECT CORRECT REPLACEMENT BELT

Refer to the belt identification section (**see page 19**) for belt selection information.

STEP 4 - CLEAN THE PULLEYS

Use a rag slightly dampened with a light, non-volatile solvent. Avoid soaking or brushing the solvent on the belt. Do not sand or scrape the pulley with a sharp object to remove grease or debris. Pulleys must be dry before using on a drive.

STEP 5 - INSPECT PULLEYS FOR WEAR AND DAMAGE

Gates sheave gauges* make it easy to see if grooves are worn. If more than 0.4 mm of wear can be seen, the pulley should be replaced. Make sure the pulleys are properly aligned.

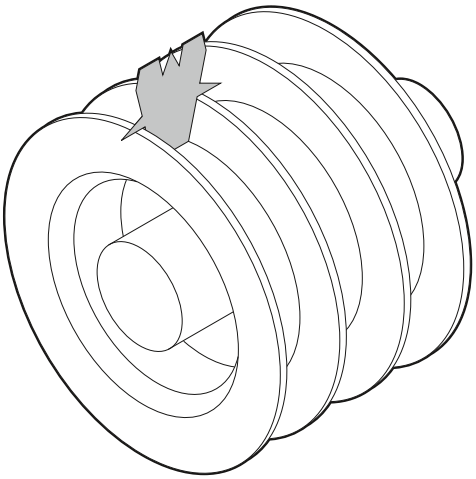

(*available from Gates - page 49)

STEP 6 - INSPECT OTHER DRIVE COMPONENTS

Always examine other drive components such as bearings and shafts for alignment, wear, lubrication,...

STEP 7 - INSTALL A NEW BELT OR BELT SET

Replace all belts on multiple belt drives. Never mix old and new belts. Older belts do not retain tension as well as new belts. If you mix belts, the load may be carried only by the new belts. This can result in premature failure. Also, never mix belts from different manufacturers. Belts with different origins may have different characteristics that can cause the belts to work against each other, resulting in unusual strain and short service life.

STEP 8 - CHECK BELT TENSION

Take up centre distance on the drive until belt tension obtained on the tension tester being used (*) is at the specified tension value for the belts. Rotate the drive for a few revolutions to bed the belts into the pulleys and recheck tension. Some long belts may appear to hang unevenly when installed. It is normal for belts within match tolerances to create noticeable differences in deflection. This “catenary effect” is a curve made by a cord of uniform weight suspended between two points. This appearance will change with proper run-in and tensioning.

(* available from Gates - page 86)

STEP 9 - SECURE MOTOR MOUNTING BOLTS TO CORRECT TORQUE AND RECHECK BELT TENSION

STEP 10 - REPLACE GUARD

STEP 11 - RUN-IN PERIOD

Let the belts run in for a while. This process consists of starting the drive, letting it run under full load, and then stopping, checking and retensioning to recommended values. Running the belts under full load allows them to seat themselves in the grooves.

If possible, let the drive run for about 24 hours. Even letting them run overnight, or over a lunch break, is better than nothing. This run-in period will reduce the future need for retensioning. Gates premium V-belts Quad-Power® 4 and Predator®, when correctly installed to the specified Gates tension, do not require a run in period.

STEP 12 -START-UP

During start-up, look and listen for unusual noise or vibration. It is a good idea to shut down the machine and check the bearings and motor. If they measure higher temperatures, the belt tension may be too tight. Or the bearing may be misaligned or improperly lubricated.

Synchronous belt drives provide many maintenance advantages that help in your daily struggle to reduce equipment repairs and hold downtime to the lowest possible level if they are given the proper care and attention during installation.

The best practices provided here give you a standardised procedure for correctly installing a synchronous belt. This procedure provides general guidelines and is intended to support any technical literature that may have been supplied by the equipment manufacturer.

STEP 1 - SECURE THE DRIVE

After the power has been turned off, drive isolated (Lock Out / Tag Out), and the guard removed, loosen the motor mounting bolts. Move the motor until the belt is slack and it can be removed without prising. Never prise off a belt!

STEP 2 - REMOVE OLD BELT

Check it for unusual wear. Excessive wear may indicate problems with drive design or maintenance procedures.

STEP 3 - SELECT CORRECT REPLACEMENT BELT

Refer to the belt identification section (**see page 19**) for belt selection information.

STEP 4 - CLEAN THE PULLEYS

Pulleys can be cleaned with a rag slightly dampened with a light, non-volatile solvent. Do not sand or scrape the pulley with a sharp object to remove grease or debris. Pulleys must be dry before using on a drive.

STEP 5 - INSPECT PULLEYS

Perform a visual inspection of the pulleys for unusual or excessive wear. In addition, always check pulley alignment - correct alignment is more critical with synchronous belt drives.

STEP 6 - INSPECT OTHER DRIVE COMPONENTS

Always examine other drive components such as bearings and shafts for alignment, wear and lubrication.

STEP 7 - INSTALL NEW BELT OVER PULLEYS

Never prise belts onto pulleys or use excessive force during belt installation.

STEP 8 - CHECK BELT TENSION

Take up centre distance on the drive until belt tension obtained on the tension tester being used (*) is at the specified tension value for the belt. Rotate the drives for a few revolutions and recheck tension. As the drive is rotating, check the belt tracking. The belt must not track over the edge of unflanged pulleys or run hard against the inside edge of flanged pulleys, and if either of these two scenarios occur the drive alignment must be improved so the rotating belt remains on the pulleys. If the drive alignment need readjusting, the belt tension must be rechecked.

(*) available from Gates - page 86)

STEP 9 - SECURE MOTOR MOUNTING BOLTS TO CORRECT TORQUE AND RECHECK BELT TENSION

Be sure all drive components are secure since any change in drive centres during operation will result in poor belt performance.

STEP 10 - START-UP

Although synchronous belts will not require further tensioning, we recommend starting up the drive and observing performance. Look and listen for any unusual noise or vibration and if either is present, shut down the drive and investigate potential causes.

Improper belt tension, either too low or too high, can cause belt drive problems. If V-belts are under-tensioned, they can slip. Slippage generates heat and will result in cracking and belt failure. If synchronous belts are under tensioned, they can jump teeth resulting in loss of synchronisation. For both types of belts, a tension that is set too high will shorten belt life due to overstretching of the tensile member and accelerated belt wear. Therefore, the correct tension of a belt in a drive is critical – whether it's a V-belt or a synchronous belt.

TOOLS TO HELP YOU CHECK BELT TENSION

Ensuring correct belt tension may seem a difficult task but in fact the opposite is true. Gates offers easy to use tools to facilitate tension measurement: Sonic Tension Meter Model 308C and Gates conventional force / deflection tension testers.

Sonic Tension Meter Model 308C - page 86

Single barrel/Double barrel Tension Tester - page 86

Double barrel Tension Tester

Sonic Tension Meter Model 308C

The Gates Sonic Tension Meter can be used with all Gates belts. The Sonic Tension Meter measures the vibration in the belt span, and converts that measurement into a reading of the actual static tension in the belt. The hand-held tension meter, running on batteries, is supplied with flexible sensor which is quickly attached.

Sonic Tension Meter Model 308C - page 86

Important note: when using the Sonic Tension Meter Model 308C, the drive must be switched off. The Gates Sonic Tension meter is not certified for use in explosion risk areas.

STEP 1 - ENTER DATA

Enter belt unit weight (provided with operating instructions), belt width for synchronous belts or number of ribs or strands for V-belts and belt span (provided by Gates software) on keypad. This data remains in the meter even after shut-off.

STEP 2 - POSITION MICROPHONE END

Hold the microphone end of the flexible sensor about 10mm above the belt span, press the “Measure” button, and strum the belt lightly to make it vibrate.

STEP 3 – DETERMINE STATIC TENSION

The computer processes the variations in sound pressure emanating from the belt span. The belt tension values are displayed on the panel in Newtons. If desired, the belt span frequencies can be displayed directly in Hz.

STEP 4 - CHECK RECOMMENDED TENSION

Since the span vibration method is intended to be a very accurate method of measuring actual tension in a belt, it is important that the proper recommended tension is calculated for the specific belt drive. To determine the belt tension recommended for specific drive applications, download the Gates belt drive selection program DesignFlex® Pro™ at **www.gates.com/drivedesign**. Alternatively, Gates Power Transmission Product Application engineers can be contacted at **pteusupport@gates.com** or the local application engineer to answer additional belt tensioning questions.

The force deflection tension method does not directly measure belt span tension or static tension. The deflection force is a calculated value that is based on the amount of static tension required in the belt. Static tension is the tension force that is actually in the belt, while deflection force is simply a measurement to check how much static tension is in the belt.

The tension testers used for the force deflection tension method are available in one or two barrel configurations. The one barrel tension tester can measure up to ± 120 N / 15 kg (30 lb.) of force; the two barrel tension tester can measure up to ± 300 N / 30 kg (66 lb.) of force. Add the force readings from each barrel to determine the total force being measured.

Single barrel/Double barrel Tension Tester - page 86

STEP 1 - POSITION THE LOWER OF THE TWO O-RINGS TO THE DEFLECTION DISTANCE GIVEN BY GATES SOFTWARE FOR TENSION SETTINGS FOR THE BELT BEING CHECKED.

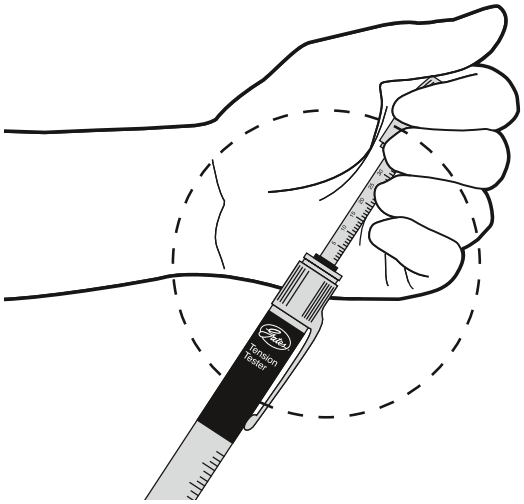

STEP 2 - DEFLECT THE BELT

Put the Gates tension tester perpendicular to the span and in the centre of the belt span. If the belt is a wide synchronous belt or a PowerBand® belt, place a piece of steel or angle iron across the belt width and deflect the entire width of the belt evenly.

Exercise enough pressure to the tension tester to deflect the belt until the bottom edge of the lower O-Ring is at the correct deflection distance. If multiple individual V-belts are used on the drive, the deflection distance can be measured against an adjacent belt. For drives with only one belt, use a straightedge or string pulled tight across the sheaves, sprockets, or top of the belt to establish a reference line.

When the belt is deflected, determine the deflection distance by measuring from the belt to the straight edge or string reference line.

STEP 3 - DETERMINE DEFLECTION FORCE

Find the amount of deflection force on the upper scale of the tension tester. The sliding rubber O-ring slides up the scale as the tool compresses and stays up for a reading of the deflection force. Read at the bottom edge of the ring. Remember to slide the O-ring down before using again. When you use the double tension tester you can read the values just underneath the rings and calculate the sum of both values.

STEP 4 - CHECK MIN./MAX. TENSION FORCES

Installation tension forces should ideally be calculated for each specific drive. The tension calculations are included, in the Gates drive design and selection computer program, Design Flex® Pro™ which can be used to quickly calculate the proper installation tensions. Design Flex® Pro™ and Design Flex Web® are available at **www.gates.com/drivedesign**.

Compare the deflection force with the range of forces recommended. If less than the minimum recommended deflection force, the belts are too loose and should be tightened. If more than the maximum recommended deflection force, the belts are too tight and should be loosened.

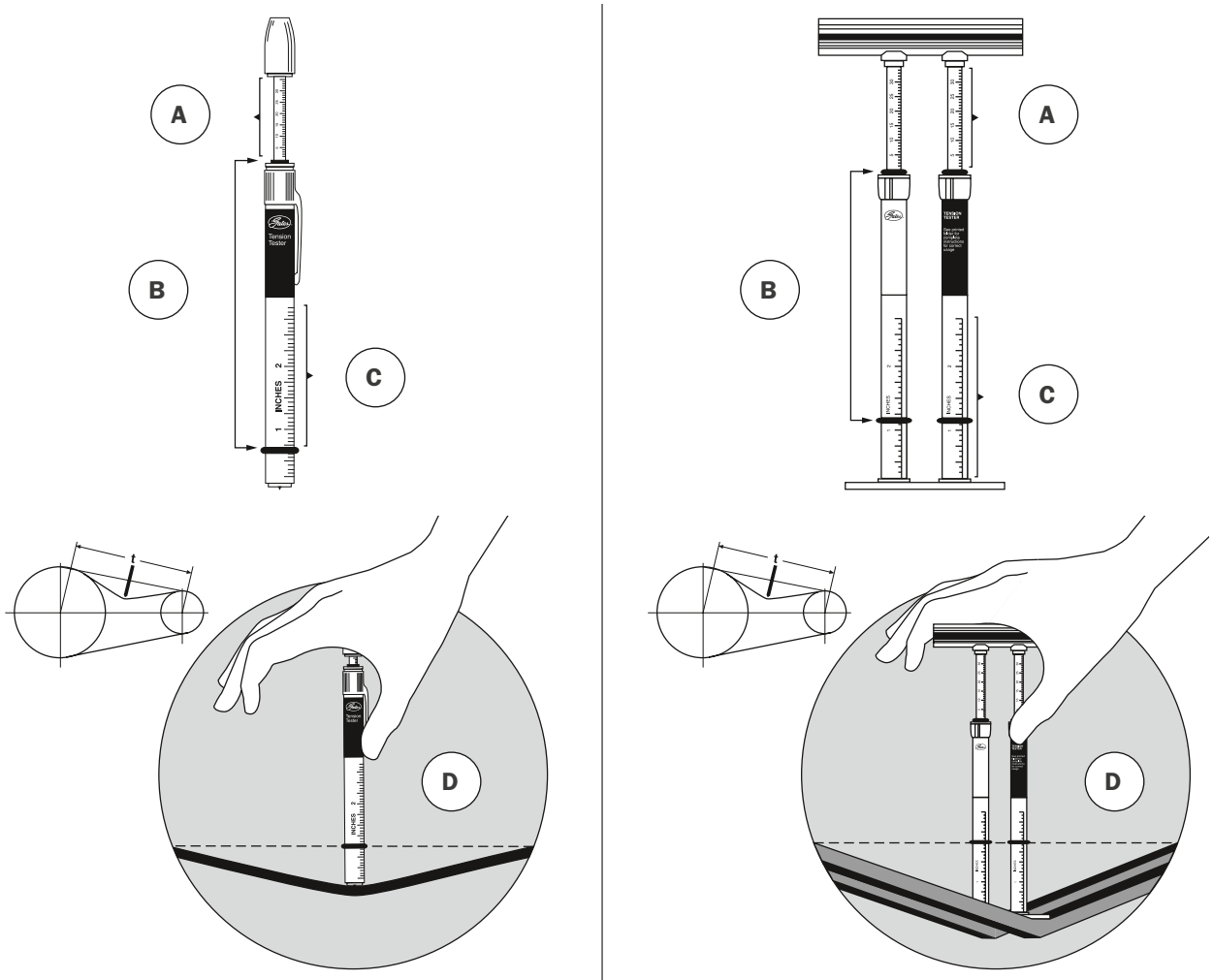

A. Deflection force scale

B. Sliding rubber “O” rings

C. Deflection distance scale (read up)

D. Read just underneath the ring. Before using the tension tester again, slide the ring downwards again

When the cross-section and number of individual belts become so large that tensioning by deflection cannot reasonably be done, another method will be used.

This alternative method of checking PowerBand® tension is the elongation method. The principle is simple. Each tension value corresponds with a given amount of elongation. Therefore the elongation of a PowerBand® as it is installed and tensioned on a drive is a measure of the static tension in the belt.

Determine the amount to elongate the belt (on the drive) to obtain the tension.

Important note: if you are retensioning a used drive, slack off on the drive until there is no tension, then tape the outside circumference of the belt while it is still on the drive.

STEP 1 - MEASURE THE BELT

Measure the outside circumference of the belt at no tension. This can be done with the belt either on or off the drive.

STEP 2 - DETERMINE BELT LENGTH MULTIPLIER

Determine the correct belt length multiplier from the table below for each of the static tensions you calculated.

STEP 3 - CALCULATE ELONGATED OUTSIDE CIRCUMFERENCE

Multiply the taped outside circumference of the PowerBand® by each of the length multipliers. This gives the elongated outside circumference of the PowerBand® corresponding to each of the calculated tensions.

Minimum tension = Ts

Maximum tension = 1.5 x Ts

Section	Type	Modulus lb/in/in
Predator® SPBP	PowerBand®	75000
Predator® SPCP	PowerBand®	150000

Ts (N)	SPBP / 5VP	Predator® SPCP
300	1.000899	1.000450
350	1.001049	1.000524554
400	1.001199	1.00059949
450	1.001349	1.000674427
500	1.001499	1.000749363
550	1.001649	1.000824299
600	1.001798	1.000899236
650	1.001948	1.000974172
700	1.002098	1.001049108
750	1.002248	1.001124045
800	1.002398	1.001198981
900	1.002698	1.001348854
1000	1.002997	1.001498726
1200	1.003597	1.001798471

Ts (N)	SPBP / 5VP	Predator® SPCP
1400	1.004196	1.002098217
1600	1.004796	1.002397962
1800	1.005395	1.002697707
2000	1.005995	1.002997452
2250	1.006744	1.003372134
2500	1.007494	1.003746815
2750	1.008243	1.004121497
3000	1.008992	1.004496178
3250	1.009742	1.00487086
3500	1.010491	1.005245542
3750	1.011240	1.005620
4000	1.011990	1.005994905
4250	1.012739	1.006370
4500	1.013489	1.006744268
4750	1.014238	1.007118949
5000	1.014987	1.007493631
5250	1.015737	1.007868312
5500	1.016486	1.008242994
6000	1.017985	1.008992357

BELT LENGTH MULTIPLIERS FOR POWERBAND®

Ts (N)	3V / 9J	SPB / 5V (15J)	SPC	8V (25J)	3VX	5VX	A	B		C		D
								< 3250	> 3250	< 3250	> 3250	
300	1.00821				1.00613							
350	1.00957				1.00715							
400	1.01094				1.00817							
450	1.01231	1.00532			1.00919	1.00337	1.00481					
500	1.01367	1.00591			1.01021	1.00374	1.00535					
550	1.01504	1.00650			1.01124	1.00412	1.00588					
600	1.01641	1.00709	1.00481		1.01226	1.00449	1.00642	1.00562	1.00674			
650	1.01778	1.00769	1.00515		1.01328	1.00487	1.00695	1.00608	1.00730			
700	1.01915	1.00828	1.00549	1.00449	1.01430	1.00524	1.00749	1.00655	1.00786	1.00393	1.00524	
750	1.02051	1.00887	1.00584	1.00481	1.01532	1.00561	1.00802	1.00702	1.00843	1.00421	1.00561	
800	1.02188	1.00946	1.00618	1.00513	1.01634	1.00599	1.00856	1.00749	1.00899	1.00449	1.00599	1.00310
900	1.02462	1.01064	1.00686	1.00578	1.01839	1.00674	1.00963	1.00843	1.01011	1.00505	1.00674	1.00348
1000	1.02735	1.01183	1.00754	1.00642	1.02043	1.00749	1.01070	1.00936	1.01124	1.00562	1.00749	1.00387
1200		1.01419	1.00891	1.00770		1.00899	1.01284	1.01124	1.01348	1.00674	1.00899	1.00465
1400		1.01656	1.01028	1.00899		1.01049	1.01498	1.01311	1.01573	1.00786	1.01049	1.00542
1600		1.01893	1.01164	1.01027		1.01198		1.01498	1.01798	1.00899	1.01198	1.00620
1800		1.02129	1.01301	1.01156		1.01348		1.01686	1.02023	1.01011	1.01348	1.00697
2000		1.02366	1.01438	1.01284		1.01498		1.01873	1.02248	1.01124	1.01498	1.00775
2250		1.02662	1.01608	1.01445		1.01685		1.02107	1.02529	1.01264	1.01685	1.00872
2500		1.02957	1.01779	1.01605		1.01873		1.02341	1.02810	1.01405	1.01873	1.00968
2750			1.01950	1.01766						1.01545	1.02060	1.01065
3000			1.02121	1.01926						1.01686	1.02247	1.01162
3250			1.02292	1.02087						1.01826	1.02435	1.01259
3500			1.02462	1.02247						1.01967	1.02622	1.01356
3750			1.02633	1.02408						1.02107	1.02809	1.01453
4000			1.02804	1.02569						1.02248	1.02997	1.01550
4250			1.02975	1.02729						1.02388	1.03184	1.01647
4500			1.03146	1.02890						1.02529	1.03371	1.01744
4750			1.03316	1.03050						1.02669	1.03559	1.01840
5000			1.03487	1.03211						1.02810	1.03746	1.01937
5250				1.03371								1.02034
5500				1.03532								1.02131
6000				1.03853								1.02325

It is extremely important that pulleys are installed and aligned properly. Any pulley must be correctly assembled, and bolts or setscrews tightened to the correct torque.

Most pulleys are attached to the shaft with a tapered bushing which fits a mating tapered bore in the pulley. This type of system consists of a bushing, a pulley and often a setscrew and key. Bushings come in several diameters. This allows a reduction in the parts inventory required in your plant because one bushing can be used with a number of different size pulleys.

TAPER BUSHES

To install, insert the bushing into the pulley. Match holes (not threads) and slip the entire unit onto the shaft. Put screws into the holes that are threaded in the pulley only. Align the pulleys and tighten the screws. As the bushing is wedged inward, it contacts and grips the shaft.

Bushing no.	Screw tightening torque (Nm)
1008	5.6
1108	5.6
1210	20.0
1215	20.0
1310	20.0
1610	20.0
1615	20
2012	30
2517	50.0
2525	50
3020	90.0
3030	90
3525	115.0
3535	115
4030	170.0
4040	170.0
4535	190.0
4545	190.0
5040	270.0
5050	270.0

PULLEY ALIGNMENT

Noise, wear on pulleys, belts and bearings, vibrations and in the end ... machine downtime may all be caused by pulley misalignment. Properly aligned pulleys have a lot of advantages:

- Lower energy consumption
- Less wear and tear on pulleys, belts and bearings
- Less noise and vibrations
- Increased belt, pulley and bearing life
- Higher reliability of the entire belt drive

Therefore, correct pulley alignment is a major element of belt drive installation and preventive maintenance. As a general rule, the deviation on pulley alignment on V-belt drives should not exceed 1/2° or 5 mm per 500 mm of drive centre distance. Alignment for synchronous, Polyflex® and Micro-V® belts should be controlled within 1/4° or 2.5 mm per 500 mm of drive centre distance.

The greater the misalignment is; the greater the chance of belt instability, increased belt wear and the greater risk of V-belt turnover.

Max deviation of pulley alignment	Per 500 mm of drive centre distance	
	(°)	(mm)
V-belts	1/2	5
Polyflex®	1/4	2.5
Micro-V®	1/4	2.5
Synchronous belts	1/4	2.5

The maximum deviation values given are the total allowable for both angular and parrallel misalignment.

If a pulley shows obvious signs of wear or damage, it will need to be replaced.

LASER AT-1 laser alignment device - page 87

To provide proper maintenance, you need to understand the nature of the belt drives in your plant. You may know the capabilities and limitations of your equipment, but are you aware of how your belt drive contributes to these performance levels.

Sometimes it is necessary to give some thought to belt service life. When belt life is below the expected performance level, for example, the situation must be improved. Belt service life might be meeting expectations, but you may be looking for opportunities to reduce existing maintenance and downtime, and this can be achieved by upgraded existing belt drives.

The first step to upgrading a belt drive is to see if simple improvements can be made at minimal costs. This involves checking the drive design for adequate capacity.

Here are examples of minor changes that could improve performance:

- Correct belt tension;
- Increase pulley diameters;
- Increase the number of belts, or use wider belt;
- Add vibration dampening to the system;
- Improve guard ventilation to reduce operating temperature;
- Make sure pulley and back idler diameters are above the minimum recommended diameters;
- Use premium belts rather than general purpose types;
- Replace worn pulleys;
- Keep pulleys properly aligned;
- Always place idler on span with lowest tension, also known as the “slack side” when the drive is running;
- Retension newly installed standard friction belts after a 24 hour run-in period;
- Review proper belt installation and maintenance procedures.

If further improvement is needed, the next step is to upgrade the drive to a higher performance belt system. Your local Gates distributor or representative can help you upgrade your existing drives in order to reduce your maintenance and downtime costs.

You may have a problem or excessive maintenance costs with a non-belt drive, such as a gear or chain drive. Your local Gates representative can offer you excellent advice as to whether or not a belt drive could solve the problem and reduce your maintenance costs.

If your belt drive is correctly designed, installed and maintained it will need very little attention. Occasionally, however, a drive may be accidentally damaged or knocked, which can alter the drive set up. Changing operating requirements or environmental conditions can also create problems. The troubleshooting guide on page 47 is designed to help you identify and correct poor drive performance problems.

All types of drives generate noise while transmitting power and each type of system has its own characteristic sound. Synchronous belt drives are much quieter than roller chain drives and V-belt drives tend to be the quietest belt drives. When noise is an issue, there are several design and maintenance tips that should be followed to achieve the quietest possible belt drive.

NOISE: DECIBEL AND FREQUENCY

- Noise is an unwanted or unpleasant sound that can be described with two criteria - frequency and decibel (dBA) levels. Frequency is measured in Hertz. The human ear is capable of distinguishing frequencies typically from 20 to 20,000 Hertz. The human ear generally does not perceive frequencies higher than 20,000 Hertz.
- The noise level or intensity of noise is measured in terms of decibels (dBA). The decibel has become the basic unit of measure since it is an objective measurement that approximately corresponds to the subjective measurement made by the human ear. Since sound is composed of several distinct and measurable parts and the human ear doesn't differentiate between these parts, measuring scales that approximate the human ear's reaction have been adopted. Three scales - A, B, and C are used to duplicate the ear's response over the scale's ranges. The A scale is most commonly used in industry because of its adoption as the standard in OSHA regulations.
- Noise described in decibels (dBA) is generally perceived as the loudness or intensity of the noise.
- While the human ear can distinguish frequencies from 20 to 20,000 Hertz, the ear is most sensitive in the range of normal speech - 500 to 2000 Hertz. As a consequence, this range is the most common concern for noise control. Frequency is most closely related to what the ear hears as pitch. High frequency sounds are perceived as whining or piercing, while low frequency sounds are perceived as rumbling.
- The combination of decibel and frequency describes the overall level of loudness to the human ear. One without the other does not adequately describe the loudness potential of the noise. For example, an 85 dBA noise at 3000 Hertz is going to be perceived as much louder than an 85 dBA noise at 500 Hertz.

For comparison, some typical noise levels and their sources are listed below.

Normal Speech	60 dBA
Busy Office	80 dBA
Textile Weaving Plant	90 dBA
Canning Plant	100 dBA
Heavy City Traffic	100 dBA
Punch Press	110 dBA
Air Raid Siren	130 dBA
Jet Engine	160 dBA

REDUCING NOISE

- Following proper installation and maintenance procedures, as well as some simple design alternatives can reduce belt drive noise.

BELT DRIVE TENSION AND ALIGNMENT

- Properly tensioning and aligning a belt drive will allow the belt drive to perform at its quietest level.
- Improperly tensioned V-belt drives can slip and squeal.
- Improper tension in synchronous belt drives can affect how the belt fits in the sprocket grooves. Proper tension

minimizes tooth to groove interference, and thereby reduces belt noise. Check to make sure that the drive is properly tensioned by using Gates tension measurement gauges.

- Misaligned V-belt drives will be noisier than properly aligned drives since interference is created at the belt's entry point into the sheave. Misaligned synchronous belt drives tend to be much noisier than properly aligned drives due to the even greater amount of interference that is created between the belt teeth and the sprocket grooves. Misaligned synchronous belt drives may cause belt tracking that forces the edge of the belt to ride hard against a sprocket flange. Misalignment causing belt contact with a flange will generate noise that is easily detected. Follow the guidelines discussed in the installation section of this manual for checking and correcting alignment.

SYNCHRONOUS SPLIT BELTS

- Wide belts can be cut into 2 or 3 narrower belts, preferably of unequal widths and this will often give a significant noise reduction.

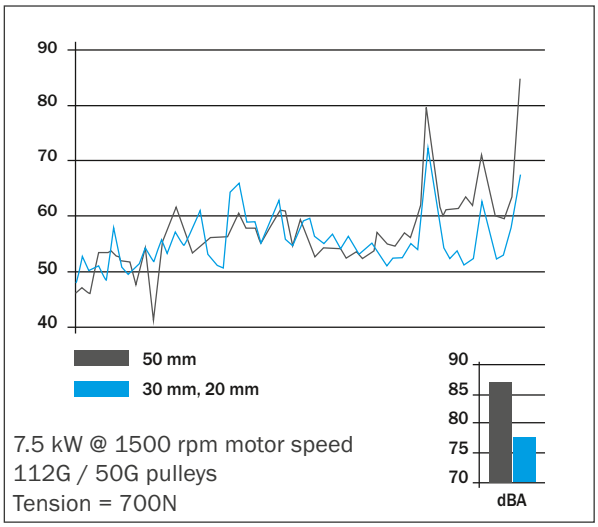

NOISE BARRIERS AND ABSORBERS

- Sometimes, even properly aligned and tensioned belt drives may be too noisy for a work environment. When this occurs, steps can be taken to modify the drive guard to reduce the noise level.
- Noise barriers are used to block and reflect noise. Noise barriers do not absorb or deaden the noise; they block the noise and generally reflect most of the noise back towards its point of origin. Good noise barriers are dense, and should not vibrate. A sheet metal belt guard is a noise barrier. The more complete the enclosure is, the more effective it is as a noise barrier. Noise barrier belt guards can be as sophisticated as a completely enclosed case, or as simple as sheet metal covering the front of the guard to prevent direct sound transmission. Depending on the application, care must be taken to ensure that the noise dampening measures implemented do not adversely affect the belt performance, i.e. by increasing the temperature within the guarded area to a point where the belt construction is affected.
- Noise absorbers are used to reduce noise reflections and to dissipate noise energy. Noise absorbers should be used in combination with a noise barrier. Noise absorbers are commonly referred to as acoustic insulation. Acoustic insulation (the noise absorber) is used inside of belt guards (the noise barrier) where necessary. A large variety of acoustic insulation manufacturers are available who can provide appropriate products for various applications.
- A combination of noise barrier (solid belt guard) and noise absorber (acoustic insulation) will provide the largest reduction in belt drive noise. While the noise reduction cannot be predicted, field experience has shown that noise levels have been reduced by 10 to 20 dBA when using complete belt guards with acoustic insulation.

4. HOW TO MAINTAIN AN EFFECTIVE PREVENTIVE MAINTENANCE PROGRAMME

DRIVEN BY POSSIBILITY™

Deciding when and how often to inspect or replace belt drives isn't always easy. Belt wear and service life depend on a variety of factors, including the original drive design, pulley alignment, installation tension, maintenance practices and environmental factors.

Experience with your own equipment will be the best guide to how often you need to inspect the belt drives. High speeds, heavy loads, frequent start/stop conditions, extreme temperatures and drives operating on critical equipment will require more frequent inspections.

WHEN TO SCHEDULE A COMPLETE SHUT-DOWN INSPECTION

- Drives fitted with standard V-belts require inspecting every 3 months (re-tension if necessary)
- Drives fitted with Gates synchronous belts and Gates Premium V-belts:
  - **Gates synchronous belts** require no maintenance during their service lifetime, provided they are installed as specified by Gates.
  - **Gates premium V-belts - Quad-Power® 4 & Predator®** are Service-Free and require no maintenance during their service lifetime provided they are installed as specified by Gates. An annual visual inspection is advised to check the overall drive condition.

When properly maintained and used under normal conditions, a well-designed industrial belt drive is capable of operating for several years. A good start to any preventive maintenance programme is to make periodic belt drive inspections a normal part of your regular maintenance rounds. The aim of these quick visual and listening inspections is to verify the general condition of the drive and identify any irregularities.

LOOK AND LISTEN

Look and listen for any unusual vibration or sound while observing the guarded drive in operation. A well-designed and maintained drive will operate smoothly and quietly.

GUARD INSPECTION

Inspect the guard for looseness or damage. Keep it free of debris and grime build-up. Any accumulation of material on the guard will act as insulation and could cause the drive to run hotter. Temperature is an important factor of belt performance and durability that may seriously reduce belt life. A rise in ambient temperature of approximately 20 °C (68 °F) above a belt's maximum operating temperature typically halves the life of the belt.

OIL AND GREASE

Also look for oil or grease dripping from the guard. This may indicate over-lubricated bearings. Oil and grease attack rubber compounds, causing them to swell and distort. This will lead to early belt failure.

ATTACHMENTS

Finally, check motor mounts for proper tightness. Check take-up slots or rails to see that they are clean and lightly lubricated.

Thorough belt drive inspection should also be part of the greater preventive maintenance plan. A drive shutdown for a thorough inspection of belts, pulleys and related drive components is required to identify signs of impending failure, and replace components before they fail.

Here's a checklist for performing a safe and efficient shutdown inspection:

STEP 1 - SECURE DRIVE

Turn off power to the drive, isolate drive (Lock Out / Tag Out).

Place all machine components in a safe (neutral) position. Any other component that could inadvertently move during the procedure must also be secured in place to prevent this movement (e.g. fan blades to prevent freewheeling).

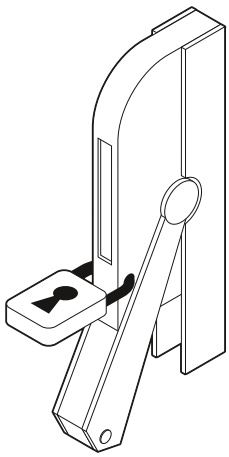

STEP 2 - GUARD INSPECTION

Remove and inspect the guard. Check it for signs of wear or rubbing against drive components. Clean the guard to prevent it from becoming insulated and closed to ventilation.

Clean off any grease or oil that may have been spilled onto the guard from over-lubricated bearings.

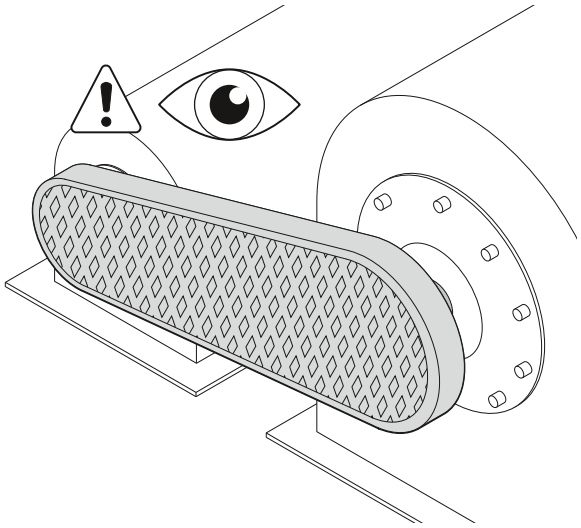

STEP 3 - BELT INSPECTION

Inspect the belt(s) for wear or damage. Mark a point on the belt, or one of the belts on a multiple V-belt drive. Work your way around the belt(s), checking for signs of unusual belt wear or damage to help you troubleshoot possible drive problems.

Check the belt for signs of excessive heat. Belts do warm up while operating, but temperatures must not exceed the belts' operating temperature range.

V-belt troubleshooting -page 50

Synchronous belt troubleshooting -page 53

Use a wrench to turn the pulley when you are rotating drives manually (to ensure correct tracking of the belt). This protects fingers from getting trapped between the belt and pulley. Rotation of large synchronous drives by pulling on the belt is particularly hazardous where entrapment of fingers between pulley flanges and the belt can result in immediate amputation of the finger(s). The drive should be rotated by turning the larger pulley, while continually practicing dynamic risk assessment.

Belts should be replaced if they show obvious signs of cracking, fraying, unusual wear or loss of teeth in a synchronous belt.

V-belt replacement - page 27

Synchronous belt replacement - page 29

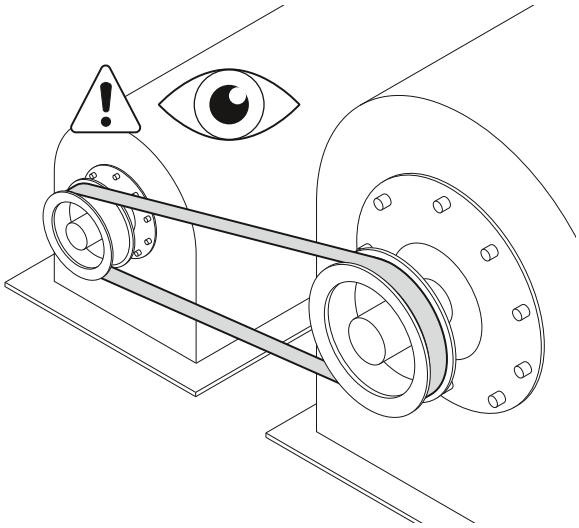

STEP 4 - PULLEY INSPECTION

When belts have been removed from the drive, check pulleys for unusual wear or obvious signs of damage. Wear is not always obvious. Use Gates sheave gauges to check V-grooves.

Always check pulleys for proper alignment and mounting. Misalignment reduces belt drive performance and service life. The main causes of misalignment are:

- pulleys are improperly located on the shafts;
- motor shafts and driven machine shafts are not parallel;
- pulleys are tilted due to improper mounting.

Parallel misalignment

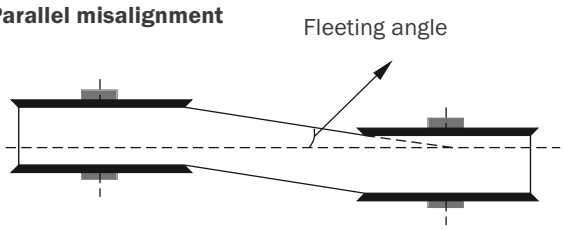

Angular misalignment

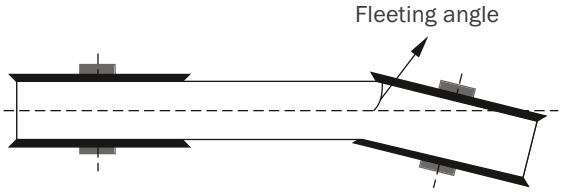

STEP 5 - CHECK PULLEY ALIGNMENT

To check alignment, you will need a straight edge or, for long centre distance drives, heavy string. Line the straight edge or string along a machined face of both pulleys as shown on the picture below. Misalignment will show up as a gap between the face of the pulley and the straight edge or string. When using this method, make sure the distance between the groove edge and the outer rim of both pulleys is identical. Pulleys can also be checked for tilting with a spirit level.

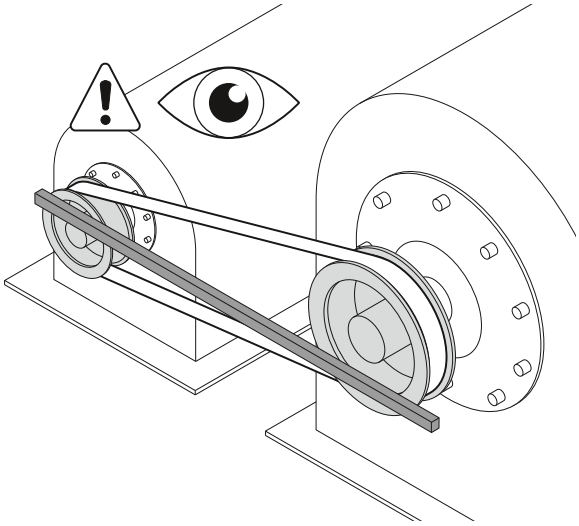

Correcting misalignment is not always easy, so laser tools such as the LASER AT-1 laser alignment device can be very helpful. The LASER AT-1 identifies parallel as well as angular misalignment between the pulleys and is suitable for pulley diameters of 60 mm and larger. Mounted in a few seconds, the laser line projected on the targets allows you to quickly ascertain and correct misalignment. It can be used on both horizontally and vertically mounted machines. For more information please see leaflet E2/20121.

LASER AT-1 laser alignment device - page 87

STEP 6 - CHECK ALIGNMENT TOLERANCES

As a general rule, the deviation on pulley alignment on V-belt drives should not exceed 1/2° or 5 mm per 500 mm of drive centre distance. Alignment for synchronous, Polyflex® and Micro-V® belts should be controlled within 1/4° or 2.5 mm per 500 mm of drive centre distance. If a pulley shows obvious signs of wear or damage, it will need to be replaced.

Pulley alignment - page 37

STEP 7 - CHECK OTHER DRIVE COMPONENTS

Always examine bearings for proper alignment and lubrication. Also check motor mounts for correct tightness. Be sure take-up rails are free of debris, obstructions, dirt or rust.

STEP 8 - CHECK EARTHING SYSTEM

Inspect static conductive earthing system (if used) and replace components as needed.

STEP 9 - RECHECK PULLEY ALIGNMENT

It is necessary to recheck the position and alignment of the pulleys because they may have been moved during the maintenance work.

STEP 10 - CHECK BELT TENSION

The final step is to check belt tension, and, if necessary, retension the belt. If too little tension is applied, V-belts may slip or synchronous belts may jump teeth. The correct tension is the lowest tension at which the belts will transmit the maximum load specified for the drive.

Belt tension - page 31

STEP 11 - REINSTALL BELT GUARD

STEP 12 - RESTART DRIVE

Turn power on and restart drive. Look and listen for anything unusual.

5. HOW TO DIAGNOSE AND RESOLVE BELT DRIVE PROBLEMS

DRIVEN BY POSSIBILITY™

When troubleshooting a drive problem, the goal is to identify the cause(s), then take appropriate corrective action. The following steps should be followed to help with this process.

1. Describe the drive problem as accurately as possible.
2. Go through the list of “Drive Symptoms”. Check those symptoms that are observed and record them, as well as observations of anything unusual about the drive.
3. Go through the “Problem/Solution Summary Table”. List the probable cause(s) and corrective action. Also, review the list of observations.
4. After identifying probable causes and corrective action, review and implement.

What to Do When All Else Fails

If the problem still exists after all troubleshooting efforts have been exhausted, contact the local Gates distributor. If the local distributor cannot solve the problem, a qualified Gates representative can be contacted. Save the failed belt(s) for further inspection.

Gates Power Transmission Product Application engineers are also available at pteusupport@gates.com or the local application engineer to answer additional drive design and troubleshooting questions.

STEP BY STEP CHECKLIST

STEP 1 - DESCRIBE THE PROBLEM.

- What is the belt tension value?
- What is wrong?
- When did it happen?
- How often does it happen?
- What is the drive application?
- Have the machine operations or output changed?
- What kind of belt(s) are being used?
- What are the expectations for belt performance in this application?

STEP 2 - IDENTIFY SYMPTOMS AND RECORD OBSERVATIONS OF ANYTHING UNUSUAL.

To determine the cause of a drive problem, you can rely on a range of tools from the surprisingly simple to the technical - some of which are available from Gates. An overview of the possibilities:

EYES, EARS, NOSE AND HANDS

Observing the drive while in operation or at rest may indicate problem areas. Can you see anything unusual about the way the belt travels around the drive? Do you smell warm rubber? Is the drive frame flexing under load? Do you hear chirping, squealing or grinding noises? Is there an accumulation of fabric dust under the drive which may interfere with the belts?

Feel the pulley grooves. They should be smooth, free of nicks and debris. Inspect the belt for unusual wear patterns, signs of burning or cracking.

BELT AND SHEAVE GAUGE - AVAILABLE FROM GATES

If you suspect a belt-to-pulley groove mismatch in a V-belt drive, belt and sheave gauges can be used to check dimensions. These are also handy for identifying a belt section for replacements, and for checking pulley grooves for wear.

LONG STRAIGHT EDGE

While V-belts can be somewhat forgiving of misalignment, this condition can still affect V-belt performance. Even slight misalignment can cause major problems on a synchronous drive.

Use a long straight edge to quickly check drive alignment. Simply lay the straight edge across the pulley faces and note the points of contact (or lack of contact). Remember to check whether pulleys are identical before starting.

Belt and sheave gauge

BELT DRIVE PROBLEM DIAGNOSIS

PROBLEMS ON V-BELT DRIVES

If you are replacing V-belts, take time to examine the old belts, pulleys and related drive components. They provide all the clues you need to determine whether your drive is functioning properly. Use below information to pinpoint the cause of the problem and take the required corrective measures. You will be rewarded with better-performing, longer-lasting drives.

WHAT TO LOOK FOR

Premature belt failure

- Broken belt(s)
- Belt(s) fail(s) to carry load (slip), without visible reason
- Edge cord failure
- Belt delamination or undercord separation

Severe or abnormal belt wear

- Wear on belt top surface
- Wear on belt top corners of belt
- Wear on belt sidewalls
- Wear on belt bottom corners
- Wear on belt bottom surface of belt
- Undercord cracking
- Burn or hardening on bottom or sidewall
- Extensive hardening of belt exterior
- Belt surface flaking, sticky or swollen
- Belt stretch

V-belts turn over or come off drive

- Single belt
- One or more belts in a set
- Joined or PowerBand® belts

Belt stretches beyond available take-up

- Single belt
- Multiple belts stretch unequally
- All belts stretch equally
- Belts do not match

Belt noise

- Squeal or “chirp”
- Slapping noise
- Rubbing sound
- Grinding sound
- Unusually loud drive

Unusual vibration

- Belts flapping
- Excessive vibration in drive system

Joined (PowerBand®) belt problems

- Tie-band separation
- Top of tie-band frayed, worn or damaged
- PowerBand® comes off drive
- One or more ribs run outside of pulley

Problems with pulleys

- Broken or damaged pulley
- Severe, rapid groove wear

Problems with drive components

- Bent or broken shafts
- Damaged guard

Hot bearings

- Belt overtensioned
- Pulleys too small
- Poor bearing condition
- Pulleys too far out on shaft
- Belt slippage

Performance problems

- Incorrect DriveN speeds

BELT DRIVE PROBLEM DIAGNOSIS

PROBLEMS ON V-BELT DRIVES

	Symptoms	Possible cause	Solution
Premature belt failure	Broken belt(s)	1. Underdesigned drive 2. Belt rolled or prised onto pulley 3. Object falling into drive 4. Severe shock load	1. Redesign using Gates Drive Design Software 2. Use drive takeup when installing 3. Provide adequate guard or drive protection 4. Redesign to accomodate shock load
	Belt fails to carry load (slip); no visible reason	1. Underdesigned drive 2. Damaged tensile member 3. Worn pulley grooves 4. Centre distance movement	1. Redesign using Gates Drive Design Software 2. Follow correct installation procedure 3. Check for groove wear, replace as needed 4. Check drive for centre distance movement during operation
	Edge cord failure	1. Pulley misalignment 2. Damaged tensile member	1. Check and correct alignment 2. Follow installation procedure
	Belt delamination or undercord separation	1. Pulleys too small 2. Back idler too small	1. Check drive design, replace with larger pulleys 2. Increase back idler to acceptable diameter
Seve re or abnormal belt wear	Wear on belt top surface	1. Rubbing against guard 2. Idler malfunction	1. Replace or repair guard 2. Replace idler
	Wear on belt top corners	1. Belt-to-pulley fit incorrect (belt too small for groove)	1. Use correct belt-to-pulley combination
	Wear on belt sidewalls	1. Belt slip 2. Misalignment 3. Worn pulleys 4. Incorrect belt	1. Retension until slipping stops 2. Realign pulleys 3. Replace pulleys 4. Replace with correct belt size
	Wear on belt bottom corners	1. Belt-to-pulley fit incorrect 2. Worn pulleys	1. Use correct belt-to-pulley combination 2. Replace pulleys
	Wear on belt bottom surface	1. Belt bottoming on pulley groove 2. Worn pulleys 3. Debris in pulleys	1. Use correct belt/pulley match 2. Replace pulleys 3. Clean pulleys
	Undercord cracking	1. Pulley diameter too small 2. Belt slip 3. Back idler too small 4. Improper storage	1. Use larger diameter pulleys 2. Fit new belt at correct tension 3. Use larger diameter back idler 4. Do not coil belt too tightly, kink or bend. Avoid heat and direct sunlight.
Seve re or abnormal belt wear	Burn or hardening on bottom or sidewall	1. Belt slip 2. Worn pulleys 3. Underdesigned drive 4. Shaft movement	1. Retension to specified belt tension 2. Replace pulleys 3. Redesign using Gates Drive Design Software 4. Check for centre distance changes
	Extensive hardening of belt exterior	1. Drive operating temperature excessed temperature range of belt	1. Improve ventilation to drive
	Belt surface flaking, sticky or swollen	1. Excessive oil or chemical contamination	1. Do not use belt dressing. Eliminate sources of oil, grease or chemical contamination

BELT DRIVE PROBLEM DIAGNOSIS

PROBLEMS ON V-BELT DRIVES

	Symptoms	Possible cause	Solution
Belt noise	Squeal or “chirp”	1. Belt slip 2. Contamination	1. Retension to specified belt tension 2. Clean belts and pulleys
	Slapping noise	1. Loose belts 2. Misalignment	1. Retension to specified belt tension 2. Realign pulleys so all belts share load equally
	Rubbing sound	1. Guard interference	1. Repair, replace or redesign guard
	Unusually loud drive	1. Incorrect belt 2. Worn pulleys 3. Debris in pulleys	1. Use correct belt size 2. Replace pulleys 3. Clean pulleys, improve shielding, remove rust, paint or dirt from grooves
Unusual vibration	Belts flapping	1. Belts undertensioned 2. Pulley misalignment	1. Retension to specified belt tension 2. Align pulleys
	Excessive vibration in drive system	1. Incorrect belt 2. Poor machine or equipment design 3. Pulley worn 4. Loose drive components	1. Use correct belt section in pulley 2. Check structure and brackets for adequate strength 3. Replace pulley 4. Check machine components
Banded (joined) belt problems	Tie-band separation	1. Worn pulleys 2. Improper groove spacing	1. Replace pulleys 2. Use correct pulleys
	Top of tie-band frayed, worn or damaged	1. Interference with guard 2. Back idler malfunction or damaged	1. Check guard 2. Repair or replace back idler
	PowerBand® comes off drive	1. Debris in pulleys 2. Misalignment	1. Clean grooves & use single belts to prevent debris from being trapped in grooves 2. Realign drive
	One or more ribs run outside of pulley	1. Misalignment 2. Undertensioned	1. Realign drive 2. Retension to specified belt tension
pulley Problems	Broken or damaged pulley	1. Incorrect pulley installation 2. Foreign objects falling into drive 3. Excessive rim speeds 4. Incorrect belt installation	1. Do not tighten bushing bolts beyond recommended torque values 2. Use adequate drive guard 3. Use pulleys capable of running at given rim speeds 4. Do not prise belts onto pulleys
	Severe, rapid groove wear	1. Excessive belt tension 2. Sand, debris or contamination	1. Retension to specified belt tension 2. Clean and shield drive as well as possible
Problems with other drive components	Bent or broken shaft	1. Extreme belt overtension 2. Overdesigned drive* 3. Accidental damage 4. Machine design error	1. Retension to specified belt tension 2. Check drive design, may need to use smaller or fewer belts 3. Redesign drive guard 4. Check machine design
	Damaged guard	1. Accidental damage or poor guard design	1. Repair, redesign for durability
Performance problems	Incorrect DriveN speeds	1. Design error 2. Belt slip	1. Use correct DriveR / DriveN pulley size for desired speed ratio 2. Retension drive to specified belt tension

BELT DRIVE PROBLEM DIAGNOSIS

PROBLEMS ON SYNCHRONOUS BELT DRIVES

Identifying the cause of synchronous belt drive failure can be challenging. In this section, we will diagnose some of the most common synchronous belt drive problems, so you will be prepared to correct them and take preventive measures in the future.

WHAT TO LOOK FOR

Belt problems

- Unusual noise
- Tension loss
- Excessive belt edge wear
- Tensile break
- Belt cracking
- Premature tooth wear
- Tooth shear
- Belt ratcheting
- Land area worn

Pulley problems

- Flange failure
- Unusual pulley wear
- Rusted or corroded

Performance problems

- Belt tracking problems
- Excessive temperature: bearings, housings, shafts, etc.
- Shafts out of synchronisation
- Vibration
- Incorrect DriveN speeds

	Symptoms	Possible cause	Solution
Problems with synchronous belts	Unusual noise	1. Misaligned drive 2. Too low or high tension 3. Back idler 4. Worn pulley 5. Bent guide flange 6. Belt speed too high 7. Incorrect belt profile for pulley (i.e. HTD®, GT, etc) 8. Subminimal diameter pulleys / idlers 9. Excess load	1. Correct alignment 2. Adjust to specified belt tension 3. Check Idler location / alignment 4. Replace pulley 5. Replace guide flange 6. Redesign drive 7. Use specified belt/pulley combination 8. Redesign drive using larger diameters 9. Redesign drive for increased capacity
	Tension loss	1. Weak support structure 2. Excessive pulley wear 3. Fixed (non-adjustable) centres 4. Excessive debris 5. Excessive load 6. Subminimal diameter pulleys / idlers 7. Unusual belt degradation	1. Reinforce structure 2. Use other pulley material 3. Use idler for belt adjustment 4. Remove debris, check guard 5. Redesign drive for increased capacity 6. Redesign drive using larger diameters 7. Use a belt specified for given environment
	Excessive belt edge wear	1. Damage due to handling 2. Flange damage 3. Belt too wide 4. Belt tension too low 5. Rough flange surface finish 6. Improper tracking 7. Belt hitting drive guard or bracketry	1. Follow proper handling instructions 2. Repair flange or replace pulley 3. Use proper width pulley 4. Adjust tension to recommended value 5. Replace or repair flange (to eliminate abrasive surface) 6. Correct alignment 7. Remove obstruction or use inside idler
	Tensile break	1. Excessive shock load 2. Subminimal diameter pulleys / idlers 3. Improper belt handling and storage prior to installation 4. Debris or foreign object in drive 5. Extreme pulley run-out	1. Redesign drive for increased capacity 2. Redesign drive using larger diameters 3. Follow proper handling and storage procedures 4. Remove object and check guard 5. Replace pulley

BELT DRIVE PROBLEM DIAGNOSIS

PROBLEMS ON SYNCHRONOUS BELT DRIVES

	Symptoms	Possible cause	Solution
Problems with synchronous belts	Belt cracking	1. Subminimal diameter pulleys 2. Back idler 3. Extreme low temperature at start-up 4. Extended exposure to harsh chemicals	1. Redesign drive using larger diameter 2. Use inside idler or increase diameter of back idler 3. Pre-heat drive environment 4. Protect drive or use belt specified to run in given environment
	Premature tooth wear	1. Too low or too high belt tension 2. Belt running partly off unflanged pulley 3. Misaligned drive 4. Incorrect belt profile for pulley (i.e. HTD®, GT, etc) 5. Worn pulley 6. Rough pulley grooves 7. Damaged pulley 8. Pulley not to dimensional specification 9. Belt contacting drive structure 10. Excessive load 11. Insufficient hardness of pulley material 12. Excessive debris	1. Adjust to specified belt tension 2. Correct alignment 3. Correct alignment 4. Use specified belt/pulley combination 5. Replace pulley 6. Replace pulley 7. Replace pulley 8. Replace pulley 9. Modify structure or use idler 10. Redesign drive for increased capacity 11. Use a more wear-resistant pulley 12. Remove debris, check guard
	Tooth shear	1. Excessive shock loads 2. Less than 6 teeth in mesh 3. Extreme pulley run-out 4. Worn pulley 5. Back idler 6. Incorrect belt profile for pulley (i.e. HTD®, GT, etc) 7. Misaligned drive 8. Belt undertensioned	1. Redesign drive for increased capacity 2. Redesign drive 3. Replace pulley 4. Replace pulley 5. Use inside idler 6. Use specified belt/pulley combination 7. Correct alignment 8. Adjust tension to specified value
Pulley problems	Flange failure	1. Belt forcing flange off	1. Correct alignment or properly secure flange to pulley
	Unusual pulley wear	1. Pulley has too little wear resistance (e.g. plastic, soft metals, aluminium) 2. Misaligned drive 3. Excessive debris 4. Excessive load 5. Too low or too high belt tension 6. Incorrect belt profile for pulley (i.e. HTD®, GT, etc)	1. Use alternative pulley material 2. Correct alignment 3. Remove debris, check guard 4. Redesign drive for increased capacity 5. Adjust tension to specified value 6. Use specified belt/pulley combination
Performance problems	Belt tracking problems	1. Belt running partly off unflanged pulley 2. Excessive belt edge wear	1. Correct alignment 2. Correct alignment
	Vibration	1. Incorrect belt profile for pulley combination (i.e. HTD®, GT, etc) 2. Too low or too high belt tension 3. Bushing or key loose	1. Use specified belt/pulley 2. Adjust tension to specified value 3. Check and reinstall as per specified belt tesnion

What to do when all else fails

We have made every effort to cover all of the common drive problems that you may encounter. However, if the problem still exists after all your troubleshooting efforts have been exhausted, contact your Gates distributor. If he cannot solve the problem for you, he will put you in touch with a Gates representative. Expert help is always available to you.

6. TECHNICAL DATA

DRIVEN BY POSSIBILITY™

CROSS REFERENCE LIST

V-BELTS

	BRAND		
Belt Type	**GATES**	**Optibelt**	**ContiTech**
V-belts single			
Premium Narrow banded-Aramid cord (SPBP, SPCP - 5VP/15JP, 8VP/25JP)	**Predator®**	Optibelt® Blue Power	Conti®V Power
Premium Narrow bandless-notched (XPZ, XPA, XPB, XPC - 3VX, 5VX)	**Quad-Power® 4**	Optibelt® Super X-Power Optibelt® Super E-Power	Conti®V FO Pioneer Conti®V FO Advance
Narrow bandless-notched (SPZ, SPA, SPB, SPC)	**Super HC® MN**		Conti®V FO DIN7753
Narrow banded (SPZ, SPA, SPB, SPC - 3V/9J, 5V/15J, 8V/25J)	**Super HC®** **Delta Narrow™**	Red Power 3 Optibelt® SK	Conti®V Advance Conti®V DIN7753
Classical bandless-notched (AX, BX, CX)	**Tri-Power®**	Optibelt® Super TX	Conti®V FO DIN2215
Classical banded (Z, A, B, C, D, E)	**Hi-Power®** **Delta Classic™**	Optibelt® VB	Conti®V DIN2215
Double V banded (AA, BB, CC, DD)	**Dubl-V**	Optibelt® DK	Conti®V Dual
Premium Fractional Horse Power banded-Aramid cord (2L, 3L, 4L, 5L)	**PoweRated®**	Optibelt® VB-LC	Conti®V Garden
Fractional Horse Power banded (2L, 3L, 4L, 5L)	**TruFlex®**		
V-belts joined			
Premium Joined Narrow banded - Aramid cord (SPBP, SPCP - 5VP/15JP, 8VP/25JP)	**Predator® PowerBand®**	Optibelt® KB Bleu Power	Conti®V Multibelt Power
Joined Premium Narrow bandless-notched (XPZ, XPA, XPB - 3VX, 5VX)	**Quad-Power® 4 PowerBand®**	Optibelt® Super KBX-Power	Conti®V Multibelt FO
Joined Narrow banded (SPB, SPC - 3V/9J, 5V/15J, 8V/25J)	**Super HC® PowerBand®**	KB Red Power 3 Optibelt® KB SK	Conti®V Multibelt Advance Conti®V Multibelt
Joined Classical bandless-notched (AX, BX, CX)	**Tri-Power® PowerBand®**	Optibelt® KBX	
Joined Classical banded (A, B, C)	**Hi-Power® PowerBand®**	Optibelt® KB VB	Conti®V Multibelt Advance Conti®V Multibelt
Polyurethane V-belt (60°) (3M, 5M, 7M, 11M)	**PolyFlex®**	Optibelt® KK	
Joined Polyurethane V-belt (60°) (3M-JB, 5M-JB, 7M-JB, 11M-JB)	**PolyFlex® JB™**		
Variable Speed bandless-notched	**Multi-Speed®**	Optibelt® Vario Power	Conti®V Varispeed Advance Conti®V Varispeed Power
V-ribbed (H, J, K, L, M - PH, PJ, PK, PLM, PM)	**Micro-V®**	Optibelt® RB	Conti®V Multirib Power Conti®V Multirib

BRAND				
Megadyne	**SIT**	**Dayco-Carlisle-Timken**	**Stomil**	**Bando**
		Aramax Xtra Duty	Super-K V-belts	Power Ace Aramid Combo
Linea Gold XP Power Wedge VX		Gold-Ribbon Cog		
Linea X	SIT Torque Flex® CSX SIT Wedge CW MC	Power-Wedge Cog		Power Ace Cog
Oleostatic (Gold) SP	SIT Excelite® ES CLSP SIT Wedge CW E	Super Power-Wedge	Super V-belts	Narrow SP Power Ace
Gold Label X	SIT Torque Flex® CTX	Gold-Ribbon Cog		Power King Cog
Oleostatic (Gold) Extra	SIT Excelite® ES CL	Super Blue Ribbon Super II	Classic V-belt	Power King
EsaFlex		Double Angle	Double side V-belt	Double V
XDV2		Durapower II Raw Edge FHP	Garden belts	UltraPower AG
				Duraflex GL (FHP)
		Aramax Wedge-Band		
PluriBand XP	SIT Banded MC	Gold-Ribbon Cog-Band Power-Wedge Cog-Band		Power Ace Cog Combo
PluriBand SP	SIT Banded E	Wedge-Band	Power Bands	Power Ace Combo
PluriBand		Super-Vee-Band	Power Bands	Power King Combo
				Banflex
				Banflex Combo
Varisect	SIT Vario	Variable Speed Cog	Super VX V-belts	Power Max Variable Speed
PV	Poly-V	Vee-Rib		Rib Ace

Important notice

The purpose of above cross-reference lists is to give you an indication of possible changeovers to Gates belts.

Gates belts can replace listed competitors' products, however, when replacing Gates belts with listed products, problems may arise since certain Gates belts give proof of a higher power capacity.

CROSS REFERENCE LIST

V-BELTS

	BRAND		
Belt Type	**GATES**	**Mitsuboshi**	**PIX**
V-belts single			
Premium Narrow banded-Aramid cord (SPBP, SPCP - 5VP/15JP, 8VP/25JP)	**Predator®**		PIX-Terminator®-HXS
Premium Narrow bandless-notched (XPZ, XPA, XPB, XPC - 3VX, 5VX)	**Quad-Power® 4**		
Narrow bandless-notched (SPZ, SPA, SPB, SPC)	**Super HC® MN**	Maxstar wedge supreme	PIX-X'tra®
Narrow banded (SPZ, SPA, SPB, SPC - 3V/9J, 5V/15J, 8V/25J)	**Super HC® Delta Narrow™**	Maxstar wedge	PIX-X'set® PIX-Muscle®-XS3
Classical bandless-notched (AX, BX, CX)	**Tri-Power®**	Triplex	
Classical banded (Z, A, B, C, D, E)	**Hi-Power® Delta Classic™**	Conventional	Power Wrap
Double V banded (AA, BB, CC, DD)	**Dubl-V**		PIX-Duo®-XS
Premium Fractional Horse Power banded-Aramid cord (2L, 3L, 4L, 5L)	**PoweRated®**		PIX-X'set® Light Duty Belts
Fractional Horse Power banded (2L, 3L, 4L, 5L)	**TruFlex®**		PIX-X'set® Light Duty Belts
V-belts joined			
Premium Joined Narrow banded - Aramid cord (SPBP, SPCP - 5VP/15JP, 8VP/25JP)	**Predator® PowerBand®**		
Joined Premium Narrow bandless-notched (XPZ, XPA, XPB - 3VX, 5VX)	**Quad-Power® 4 PowerBand®**		
Joined Narrow banded (SPB, SPC - 3V/9J, 5V/15J, 8V/25J)	**Super HC® PowerBand®**	Multi Maxstar	PIX-DuraBand®-XS
Joined Classical bandless-notched (AX, BX, CX)	**Tri-Power® PowerBand®**	Multi Triplex	PIX-DuraBand®-XS
Joined Classical banded (A, B, C)	**Hi-Power® PowerBand®**	Conventional Banded	
Polyurethane V-belt (60°) (3M, 5M, 7M, 11M)	**PolyFlex®**	Polymax	
Joined Polyurethane V-belt (60°) (3M-JB, 5M-JB, 7M-JB, 11M-JB)	**PolyFlex® JB™**	Multi Polymax	
Variable Speed bandless-notched	**Multi-Speed®**		PIX-X'set®-VS
V-ribbed (H, J, K, L, M - PH, PJ, PK, PLM, PM)	**Micro-V®**	Ribstar	PIX-X'ceed®

BRAND			
PTS Strongbelt	**SKF**	**Colmant Cuveliers**	**Fenner**
		Veco 300	
			Fenner Quattro plus
Strongbelt Maximum	Cogged raw edge wedge belt	Veco GTX Veco MX	Fenner Power CRE plus wedge belt
Strongbelt Cursus	Wrapped wedge belt Wrapped narrow wedge	Veco Evolution Veco 200	Fenner Ultra Plus 150 Fenner Ultra Plus
Moulded cogged, raw edge	Cogged raw edge classical belt		
Strongbelt Classis	Wrapped classical belt	Veco 100	Fenner-Classic V-belt
Strongbelt Duplum	Double classical (Hex) belt	Ventico Garden	
		Ventico Garden	
		Ventico Garden	
Strongbelt Rubustus			
Strongbelt Rubustus	Banded wedge belt	Vecoband	Fenner Concord Plus
Strongbelt Rubustus	Banded classical belt	Vecoband	
60° polyurethane-banded V-belt			
60° polyurethane-banded V-belt			
Strongbelt Varius		Variveco	
Strongbelt Forma	Ribbed belt		Fenner Polydrive Plus

Important notice

The purpose of above cross-reference lists is to give you an indication of possible changeovers to Gates belts.

Gates belts can replace listed competitors' products, however, when replacing Gates belts with listed products, problems may arise since certain Gates belts give proof of a higher power capacity.

CROSS REFERENCE LIST

SYNCHRONOUS BELTS

	BRAND		
Belt Type	**GATES**	**Optibelt**	**ContiTech**
Synchronous belts			
Ultimate Performance, unbeaten Torque (5mm, 8mm, 14mm, 19mm)	**Poly Chain® GT Carbon™** **Poly Chain® Carbon™ Volt®**	(DeltaChain® Carbon)	Conti® Synchrochain Carbon
High Performance, High Torque (8mm, 14mm)	**Poly Chain® GT2**	(DeltaChain®)	Conti® Synchrochain
Increase Power rating - reinforced cord (8mm, 14mm)	**PowerGrip® GTX**	Optibelt® Omega HL	Conti® Synchroforce CXA (HTD/STD) Conti Falcon Pd Conti® Synchroforce Extreme
Increase Power rating (2mm, 3mm, 5mm, 8mm, 14mm)	**PowerGrip® GT3**	Optibelt® Omega HP Optibelt® Omega FanPower	Conti® Synchroforce CXP (HTD/STD) Conti® Synchroforce Supreme
High Torque - HTD (3mm, 5mm, 8mm, 14mm, 20mm)	**PowerGrip® HTD®**	Optibelt® Omega Optibelt® STD	Conti® Synchrobelt (HTD/STD)
Trapezoidal (MXL, XL, L, H, XH, XXH)	**PowerGrip®**	Optibelt® ZR	Conti® Synchrobelt
Double Sided (XL, L, H - 3mm, 5mm, 8mm, 14mm)	**Twin Power®**	Optibelt® ZR double sided Optibelt® HTD double sided	Conti® Synchrotwin DH Conti® Synchrotwin CXP(III)
Open End - Rubber (MXL, XL, L - 2mm, 3 mm, 5mm, 8mm, 14mm)	**Long Length™**	Optibelt® HP Omega Linear Optibelt® Omega Linear Optibelt® ZR/HTD/STD linear	Conti® Synchroline
Paint and varnish compatible	**PowerPaint™**	Optibelt® Rainbow	Conti® Synchrocolor
Synchronous + Micro-V®	**Mill-K**	Optibelt® Omega Special	Conti® Synchrorib

PU timing belts			
Metric pitch - sleeves (T2.5, T5, T10 - AT5, AT10)	**Synchro-Power®**	Optibelt® Alpha Power	
Metric pitch double sided - sleeves (DL-T5, DL-T10)	**Synchro-Power®**	Optibelt® Alpha-D	
Metric pitch - endless		Optibelt® Alphaflex	
Linear	**Synchro-Power® Long Length™**	Optibelt® Alpha linear	SynchroDrive®

BRAND				
Megadyne	Stomil	Bando	Mitsuboshi	PIX
Isoran RPP Gold Isoran RPP Platinum			Giga Torque GX Mega Torque GII	
Isoran RPP Silver2		Synchro-Link® HPS	Mega Torque G	PIX-TorquePlus-XT2
Isoran RPP (Plus)		Synchro-Link® HT/STS	Super Torque	PIX-X'act HTD/STD
Isoran Imperial		Synchro-Link®	Timing Belt G	PIX-X'act CT
Isoran RPP DD Isoran DD		Synchro-Link® double sided		PIX-Dua XT
Isoran Open-end		Open end	Long Span	
MegaPaint®				PIX-PaintPro®-XT
Roller mill belts				PIX-Brawn-XT

		Synchro-Link Polyurethane		
		Synchro-Link Polyurethane		

Important notice

The purpose of above cross-reference lists is to give you an indication of possible changeovers to Gates belts.

Gates belts can replace listed competitors' products, however, when replacing Gates belts with listed products, problems may arise since certain Gates belts give proof of a higher power capacity.

CROSS REFERENCE LIST

SYNCHRONOUS BELTS

	BRAND		
Belt Type	**GATES**	**PTS Strongbelt**	**SKF**
Synchronous belts			
Ultimate Performance, unbeaten Torque (5mm, 8mm, 14mm, 19mm)	**Poly Chain® GT Carbon™** **Poly Chain® Carbon™ Volt®**		
High Performance, High Torque (8mm, 14mm)	**Poly Chain® GT2**		
Increase Power rating - reinforced cord (8mm, 14mm)	**PowerGrip® GTX**		
Increase Power rating (2mm, 3mm, 5mm, 8mm, 14mm)	**PowerGrip® GT3**	Strongbelt® Premium	
High Torque - HTD (3mm, 5mm, 8mm, 14mm, 20mm)	**PowerGrip® HTD®**	Strongbelt® Motus	HiTD
Trapezoidal (MXL, XL, L, H, XH, XXH)	**PowerGrip®**	Timing belt - inch	Timing belt
Double Sided (XL, L, H - 3mm, 5mm, 8mm, 14mm)	**Twin Power®**	Double Timing belt - M	Double sided timing belt Double sided HiTD belt
Open End - Rubber (MXL, XL, L - 2mm, 3 mm, 5mm, 8mm, 14mm)	**Long Length™**	Open-ended timing belt	
Paint and varnish compatible	**PowerPaint™**		
Synchronous + Micro-V®	**Mill-K**		

PU timing belts			
Metric pitch - sleeves (T2.5, T5, T10 - AT5, AT10)	**Synchro-Power®**	Timing belt - T Timing belt - AT	
Metric pitch double sided - sleeves (DL-T5, DL-T10)	**Synchro-Power®**	Double timing belt - T	
Metric pitch - endless			
Linear	**Synchro-Power® Long Length™**		

BRAND			
Colmant Cuveliers	**Fenner**	**SIT**	**Dayco-Carlisle-Timken**
		Mustang Torque	Panther XT
	Fenner® Torque Drive Plus3	Mustang Speed HTD Mustang Speed Super Torque	Panther ACHE Belt
Veco® Synchro HTB	Fenner® HTD	Top Drive® HTD	Synchro-Cog HT
Veco® Synchro Standard	Fenner® Classical	Classica	Synchro-Cog
		Mustang Speed Dual Top Drive® HTD Dual	Dual Synchronous Belt
		Open end	

Veco Synchro métrique	Metric timing		
Veco Synchro métrique	Double-sided metric		

Important notice

The purpose of above cross-reference lists is to give you an indication of possible changeovers to Gates belts.

Gates belts can replace listed competitors' products, however, when replacing Gates belts with listed products, problems may arise since certain Gates belts give proof of a higher power capacity.

GROOVE DIMENSION NOMENCLATURE FOR V-BELTS

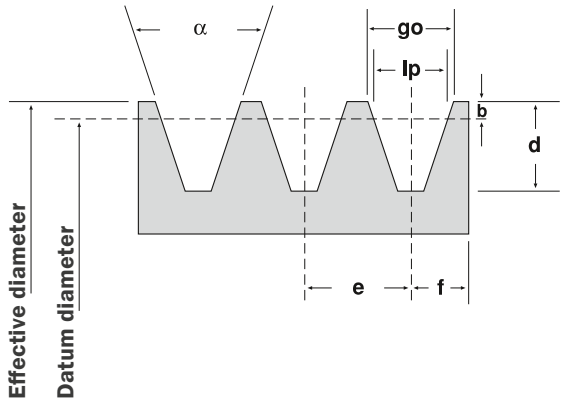

Groove dimensions and tolerances according to ISO 4183, DIN 2211 and DIN 2217 engineering standards

Belt section	Datum width lp (mm)	Datum diameter (mm)	Groove angle (α)	go (mm)	d (mm)	e (mm)	f* (mm)	b (mm)
Z** SPZ*** XPZ	8.5	63 to 80 > 80	34° ± 1° 38° ± 1°	9.72 9.88	11 (+0.25/-0)	12 ± 0.30	8 ± 0.6	2.00
A** SPA*** XPA	11	90 to 118 > 118	34° ± 1° 38° ± 1°	12.68 12.89	13.75 (+0.25/-0)	15 ± 0.30	10 ± 0.6	2.75
B** SPB*** SPB-PB XPB	14	140 to 190 > 190	34° ± 1° 38° ± 1°	16.14 16.41	17.5 (+0.25/-0)	19 ± 0.40	12.5 ± 0.8	3.50
C** SPC*** SPC-PB XPC	19	224 to 315 > 315	34° ± 1/2° 38° ± 1/2°	21.94 22.31	24 (+0.25/-0)	25.5 ± 0.50	17 ± 1.0	4.80
D** mm	27	355 to 500 > 500	36° ± 1/2° 38° ± 1/2°	32.00	28 (min.)	37 ± 0.60	24 (±2)	8.10
E** mm	32	500 to 630 > 630	36° ± 1/2° 38° ± 1/2°	40.00	33 (min.)	44.5 ± 0.70	29 (±2)	12.00

Tolerances on datum diameters can be calculated by applying the tolerance (+ 1.6 /- 0%) to the nominal value of the datum diameter in mm.

* These tolerances have to be taken into account when aligning the pulleys.

** According to DIN 2217.

*** According to DIN 2211 and ISO 4183.

Groove dimensions and tolerances for Super HC® PowerBand® according to ISO 5290 engineering standards

Belt section	Effective diameter (mm)	Groove angle (α) ± 1/4°	go (mm) ± 0.13	d (mm) (+ 0.25/-0)	e* (mm) ± 0.40	f (mm)
3V/9J PowerBand®	< 90 90 to 150 151 to 300 > 300	36° 38° 40° 42°	8.9	8.9	10.3	9 (+2.4/-0)
5V/15J PowerBand®	< 250 250 to 400 > 400	38° 40° 42°	15.2	15.2	17.5	13 (+3.2/-0)
8V/25J PowerBand®	< 400 400 to 560 > 560	38° 40° 42°	25.4	25.4	28.6	19 (+6.3/-0)

* Summation of the deviations from “e” for all grooves in any pulley shall not exceed ± 0.5 mm for 9J and 15J, ± 0.8 mm for 25J.

Groove dimensions and tolerances for Super HC ® PowerBand® according to RMA engineering standards

Belt section	Datum width (mm)	Effective diameter (mm)	Groove angle (α) ± 1/4°	go (mm) ± 0.13	d (mm) (minimum)	e* (mm) ± 0.40	f (mm)	b (mm)
3V/3VX and PowerBand®	8.45	< 90 90 to 150 151 to 300 > 300	36° 38° 40° 42°	8.89	8.6	10.32	8.73 (+2.4/-0)	0.65
5V/5VX and PowerBand®	14.40	< 250 250 to 400 > 400	38° 40° 42°	15.24	15.0	17.46	12.70 (+3.2/-0)	1.25
8V/8VX and PowerBand®	23.65	< 400 400 to 560 > 560	38° 40° 42°	25.4	25.1	28.58	19.05 (+6.3/-0)	2.54

* Summation of the deviations from “e” for all grooves in any pulley shall not exceed ± 0.79 mm.

Groove dimensions and tolerances for Hi-Power® PowerBand® according to RMA engineering standards

Belt section	Effective diameter (mm)	Groove angle (α) ± 1/2°	go (mm)	d (mm) ± 0.79	e* (mm) ± 0.60	f (mm)
A - PowerBand®	< 140 > 140	34° 38°	12.55 ± 0.13 12.80 ± 0.13	12.45	15.88	9.53 (+1.78/-0)
B - PowerBand®	< 180 > 180	34° 38°	16.18 ± 0.13 16.51 ± 0.13	14.73	19.05	12.70 (+3.80/-0)
C - PowerBand®	< 200 200 to 315 > 315	34° 36° 38°	22.33 ± 0.18 22.53 ± 0.18 22.73 ± 0.18	19.81	25.40	17.48 (+3.80/-0)
D - PowerBand®	< 355 355 to 450 > 450	34° 36° 38°	31.98 ± 0.18 32.28 ± 0.18 32.59 ± 0.18	26.67	36.53	22.23 (+6.35/-0)

* Summation of the deviations from “e” for all grooves in any pulley shall not exceed ± 1.2 mm.

GROOVE DIMENSION NOMENCLATURE FOR MICRO-V® BELTS

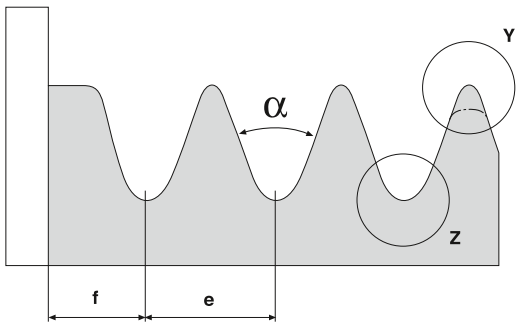

Groove dimension

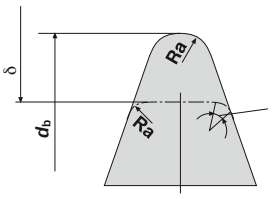

Detail Y: Groove Top

The groove bottom design may not exceed the indicated Ri value (depending on pulley manufacture).

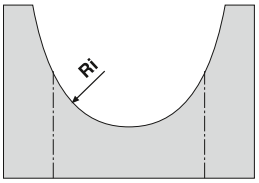

Detail Z: Groove bottom

The design of the groove top may not exceed indicated minimum and maximum values (depending on pulley manufacture).

Groove dimensions and tolerances for Micro-V® according to DIN 7867 and ISO 9981 engineering standards

Belt section	Groove angle	e* (mm)	Ri (mm)	Ra (mm)	f (mm)
PJ	40 ± 1/2°	2.34 ± 0.03	0.40	0.20	1.8
PK	40 ± 1/2°	3.56 ± 0.05	0.50	0.25	2.5
PL	40 ± 1/2°	4.70 ± 0.05	0.40	0.40	3.3
PM	40 ± 1/2°	9.40 ± 0.08	0.75	0.75	6.4

* Summation of the deviations from “e” for all grooves in any pulley shall not exceed ± 1.2 mm.

GROOVE DIMENSION NOMENCLATURE FOR POLYFLEX® JB™ BELTS

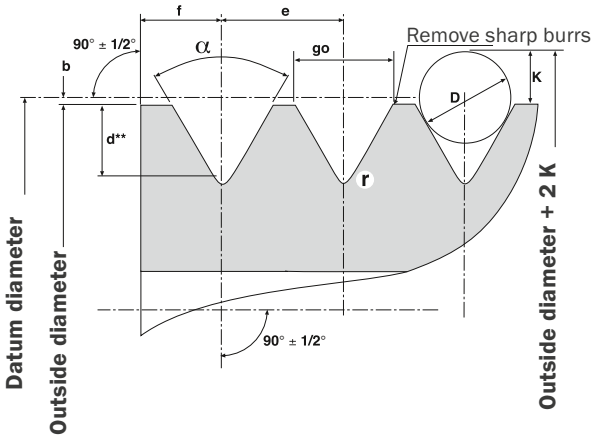

** Groovedepth to bottom of straight-sidewall portion groove; i.e. tangentpoint of “d” and “r” dimensions.

Groove dimensions and tolerances for Polyflex® JB™

Groove designation	Outside diameter	Groove angle (α) ± 1/4°	go (mm) ± 0.05	d** (mm)	e* (mm) ± 0.13 / 0.05	f (mm) min.	r (mm) max.	2K (mm) ± 0.15	D (mm) ± 0.2	2b (mm)
3M	17-23 > 23	60° 62°	2.80	1.97 1.90	3.35	2.23	0.3	4.15 4.16	3.00	0,6
5M	26-32 33-97 > 97	60° 62° 64°	4.50	3.28 3.15 3.05	5.30	3.45	0.4	5.71 5.75 5.79	4.50	0,8
7M	42-76 > 76	60° 62°	7.10	5.28 5.08	8.50	5.65	0.6	10.20 10.25	7.50	0,9
11M	67-117 > 117	60° 62°	11.20	8.51 8.20	13.20	8.60	0.8	15.10 15.19	11.50	1,1

NOTES

1 The sides of the groove shall not exceed 3 micron (RMS) roughness

2. The summation of the deviations from “e” for all grooves in any pulley shall not exceed ± 0.30 mm

3. The tolerance on the outside diameter is:
   0.13 mm for pulleys with 26 mm through 125 mm outside diameter
   0.38 mm for pulleys with 126 mm through 250 mm outside diameter
   0.76 mm for pulleys with 251 mm through 500 mm outside diameter
   1.27 mm for pulleys with 501 mm outside diameter and more.

4. Radial run-out shall not exceed 0.13 mm TIR* for outside diameters up through 250 mm - add 0.01 mm TIR* per 25 mm of outside diameter more than 250 mm

5. Axial run-out shall not exceed 0.03 mm TIR* per 25 mm of outside diameter for diameters up through 500 mm - add 0.01 mm TIR* per 25 mm of outside diameter for diameters more than 500 mm

* TIR: Total Indicator Reading

** Groove depth to bottom of straight-sidewall portion groove; i.e. tangent point of “d” and “r” dimensions

PULLEY BORE/FACE DIAMETER TOLERANCE SPECIFICATIONS

Gates recommends that pulleys are precision made to close tolerances. Inaccurate manufacture or reboring may result in poor drive performance. Permissible tolerances for bore and for outside diameter are shown in the tables on this page. Working surface should be free from surface defects and be to 3.2 µm or better.

Pulley tolerance band

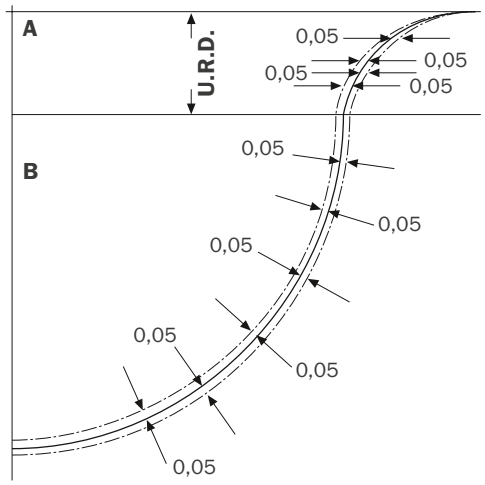

Pitch	U.R.D. (mm)
2mm	0.20
3mm	0.32
5mm	0.53
8mm	0.89
14 mm	1.65
20 mm	2.54

A: Concentric measurement

B: Perpendicular measurement

* 8M and 14M HTD® pulleys are suitable for PowerGrip® GT3 belts.

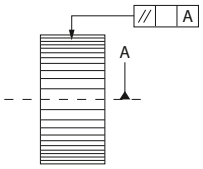

Helix angle

Grooves should be parallel to the axis of the bore within 0.01 mm per 10 mm.

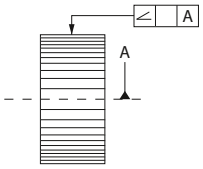

Draft

The maximum permissible draft is 0.01 mm per 10 mm of face width, but it must not exceed the outside diameter tolerance.

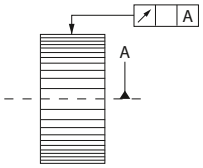

Eccentricity

Allowable amount from pulley bore to outside diameter is shown below.

Outside Diameter (mm)	Total Eccentricity
Up to 203	0.1
Over 203	0.005 per 10 mm of diameter (may not exceed the tolerance on face diameter)

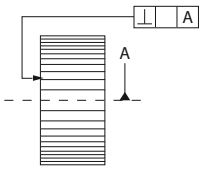

Parallelism

Bore of pulley to be perpendicular to vertical faces of pulley within 0.01 mm per 10 mm of radius with a maximum of 0.51 mm T.I.R.

Pulley flange design

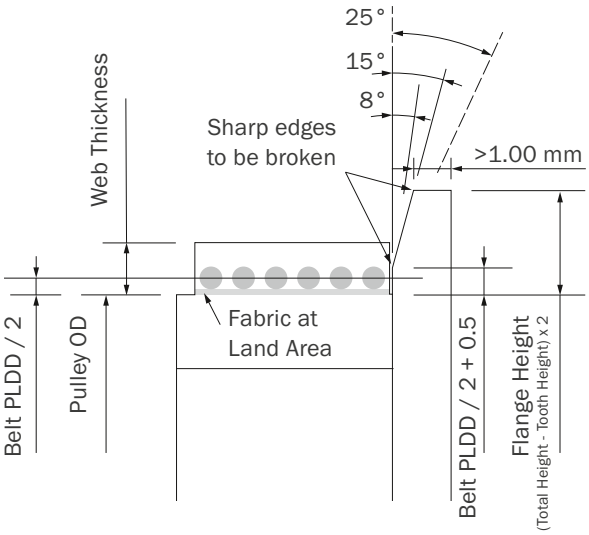

- Standard flanged synchronous pulleys will have flanges fitted on both sides.
- Pulley grooves should be parallel to the axis of the bore within 0.01 mm per 10 mm.
- Depending on the angle, the outer edge of the rim flange may not be flush with the front face of the timing belt pulley.

POWERGRIP® HTD & GT	
Belt Pitch (mm)	**Pitch Line Differencial Diameter (PLDD) (mm)**
2	0.508
3	0.762
5	1.143
8	1.372
14	2.794

POLY CHAIN® GT	
Belt Pitch (mm)	**Pitch Line Differencial Diameter (PLDD) (mm)**
5	1.143
8	1.600
14	2.800
19	3.800

Minimum recommended idler diameters

	Belt section	Min O.D. of grooved inside idler		Min O.D. of flat outside idler	
		mm	inch	mm	inch
Predator®	SPBP	160	6.30	240	9.44
	SPCP	250	9.84	400	15.75
	8VP	317	12.48	445	17.52
Quad-Power® 4	XPZ / 3VX	56	2.20	80	3.15
	XPA	80	3.15	120	4.72
	XPB / 5VX	112	4.41	160	6.30
	XPC	180	7.09	250	9.84
Super HC® MN	SPZ	56	2.20	85	3.35
	SPA	80	3.15	120	4.72
	SPB	112	4.41	168	6.61
	SPC	180	7.09	270	10.63
Super HC®	SPZ / 3V	71	2.80	120	4.72
	SPA	100	3.94	160	6.30
	SPB / 5V	160	6.30	250	9.84
	SPC	250	9.84	350	13.78
	8V	317	12.48	450	17.72
Hi-Power®	Z	60	2.36	90	3.54
	A	85	3.35	110	4.33
	B	112	4.41	160	6.30
	C	160	6.30	220	8.66
	D	300	11.81	350	13.78
	E	500	19.69	600	23.62
Hi-Power® Dubl-V	AA	85	3.35	*	*
	BB	112	4.41	*	*
	CC	160	6.30	*	*
	DD	330	12.99	*	*
Delta Narrow™	SPZ	71	2.80	120	4.72
	SPA	100	3.94	160	6.30
	SPB	160	6.30	250	9.84
	SPC	250	9.84	400	15.75
Delta Classic™	Z	60	2.36	90	3.54
	A	85	3.35	110	4.33
	B	112	4.41	160	6.30
	C	160	6.30	220	8.66

	Belt section	Min O.D. of grooved inside idler		Min O.D. of flat outside idler	
		mm	inch	mm	inch
Predator® PowerBand®	SPBP	160	6.30	250	9.84
	SPCP	250	9.84	400	15.75
	5VP/15JP	160	6.30	250	9.84
	8VP	317	12.48	445	17.52
Quad-Power® 4 PowerBand®	XPZ	56	2.20	80	3.15
	XPA	96	3.78	144	5.67
	XPB	135	5.31	192	7.56
	3VX	71	2.80	100	3.94
	5VX	112	4.41	180	7.09
Super HC® PowerBand®	SPB	160	6.30	250	9.84
	SPC	250	9.84	400	15.75
	3V/9J	71	2.80	108	4.25
	5V/15J	160	6.30	250	9.84
	8V/25J	317	12.48	445	17.52
Hi-Power® PowerBand®	B	137	5.39	180	7.09
	C	228	8.98	300	11.81
	D	330	12.99	430	16.93
PoweRated®	3L	38	1.50	50	1.97
	4L	64	2.52	83	3.27
	5L	89	3.50	116	4.57
Polyflex®	3M	17	0.67	*	*
	5M	26	1.02	*	*
	7M	42	1.65	*	*
	11M	67	2.64	*	*
Polyflex® JB™	3M-JB	17	0.67	*	*
	5M-JB	26	1.02	*	*
	7M-JB	42	1.65	*	*
	11M-JB	67	2.64	*	*
Micro-V®	PJ	20	0.79	32	1.26
	PK	50	1.97	90	3.54
	PL	75	2.95	115	4.53
	PM	180	7.09	270	10.63

Minimum recommended pulley sizes for synchronous belts

	Belt pitch	Min. recom-mended pulley size (N° of grooves)	Min. back idler di-ameter (mm)
Poly Chain® Carbon™ Volt®	8MGT	22	85
	14MGT	28	190
Poly Chain® GT2	8MGT	22	*
	14MGT	28	*
PowerGrip® GTX	8MX	22	85
	14MX	28	190
PowerGrip® GT3	2MGT	10	10
	3MGT	16	25
	5MGT	18	45
	8MGT	22	85
	14MGT	28	190
PowerGrip® HTD®	3M	10	15
	5M	14	35
	8M	22	85
	14M	28	190
	20M	34	325
PowerGrip®	MXL	10	10
	XL	10	25
	L	10	45
	H	14	85
	XH	18	190
	XXH	18	260

	Belt pitch	Min. N° of grooves	N° of grooves
Twin Power®	XL	10	10
	L	10	10
	H	14	14
	5M	14	14
	8MGT	22	22
	14MGT	28	28

	Belt pitch	Min. recom-mended pulley size (N° of grooves)	Min. back idler di-ameter (mm)
Synchro-Power®	T2.5	12	20
	T5	10	30
	T10	14	80
	AT5	15	60
	AT10	15	120
	T5D	10	
	T10D	14	
Synchro-Power® LL	T5	10	30
	T10	14	80
	T10HF	12	60
	T20	15	120
	AT5	15	60
	AT10	15	120
	ATL10	25	150
	ATL10HF	20	130
	AT20	18	180
	ATL20	30	250
	HTD5M	14	60
	HTD8M	20	120
	HTD14M	28	180
	HTDL14M	43	250
	HPL14M	44	250
	STD5M	14	60
	STD8M	20	120
	XL	10	30
	L	10	60
	H	14	80
	XH	12	150

Minimum installation and take up allowance (V-Belts, Micro-V® Belts, Polyflex® and Polyflex® JB™ Belts, Synchronous Belts

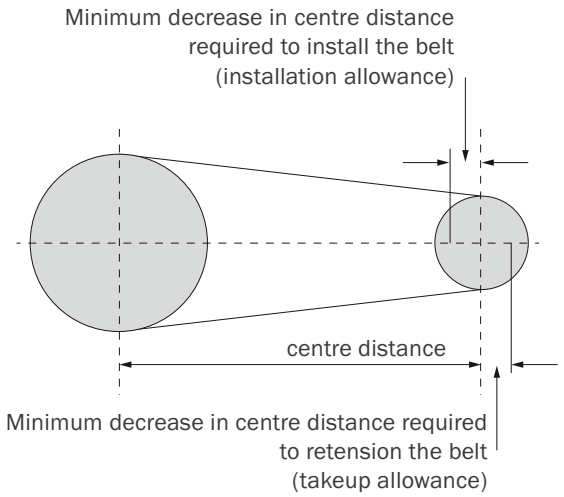

Provide the minimum intallation and takeup allowances

- Find the minimum intallation and takeup allowances from the table
- If you can't adjust the centre distanceto install or takeup the belts, it is advisable to use an idler. Separate instructions on the use of idlers are given on **page 77**.

V-belts

Datum length (mm)	Minimum installation allowance (mm)																Minimum takeup allowance (mm) All sections
	V-belt section																
	XPZ 3VX SPZ 3V	XPA SPA	XPB 5VX SPB 5V	SPC XPC	8V	3V / 9J PB	5V / 15J PB	8V PB 25J PB	Z	A	A PB	B	B PB SPB PB	C	C PB SPC PB	D	
420 - 1199	15	20	-	-	-	30	-	-	15	20	30	25	35	40	50	-	25
1200 - 1999	20	25	25	-	-	35	55	-	20	20	30	30	40	40	50	50	35
2000 - 2749	20	25	25	35	40	35	55	85	20	25	35	30	40	40	50	50	40
2750 - 3499	20	25	25	35	40	35	55	85	-	25	35	30	40	40	50	50	45
3500 - 4499	20	25	25	35	40	35	55	85	-	25	35	30	40	50	60	55	55
4500 - 5499	-	25	25	35	45	-	55	90	-	25	35	40	50	50	60	60	65
5500 - 6499	-	-	35	40	45	-	60	90	-	25	35	40	50	50	60	60	85
6500 - 7999	-	-	35	40	45	-	60	90	-	-	-	40	50	50	60	65	95
8000 -	-	-	35	45	50	-	60	100	-	-	-	-	50	50	60	65	110

PB = PowerBand®

Micro-V® belts					
Effective length (mm)	Minimum installation allowance (mm)				Minimum takeup allowance (mm) All sections
	Micro-V® belt section				
	PJ	PK	PL	PM	
-500	10				10
501 - 1000	15	10			20
1001 - 1500	15	15	25		25
1501 - 2000	20	15	25		35
2001 - 2500	20	20	30	40	40
2501 - 3000		25	30	40	45
3001 - 4000		30	35	45	60
4001 - 5000				45	65
5001 - 6000				50	70
6001 - 7500				55	85
7501 - 9000				65	100
9001 -				70	115

Polyflex® and Polyflex® JB™ belts					
Effective length (mm)	Minimum installation allowance (mm)				Minimum takeup allowance (mm) All sections
	Polyflex® and Polyflex® JB™ belts				
	3M-JB	5M-JB	7M-JB	11M-JB	
180 - 272	5				
280 - 300	7.5	10			5
307 - 710	10	15	15	25	15
730 - 1090		25	25	30	30
1120 - 1500		30	30	35	35
1550 - 1900			30	40	35
1950 - 2300			40	50	45

Synchronous belts					
	Belt length (mm)	Min. standard installation allowance (flanged pulleys removed for installation) mm	Min. installation allowance (one pulley flanged) mm	Min. installation allowance (both pulleys flanged) mm	Min. tensioning allowance (any drive) mm
Poly Chain® Carbon™ Volt® 8MGT Poly Chain® GT2 8MGT	640 - 1000	2	24	35	1
	1001 - 1780	3	25	36	1
	1781 - 2540	3	25	37	1
	2541 - 3300	4	26	37	1
	3301 - 4600	5	27	39	1

Synchronous belts					
	Belt length (mm)	Min. standard installation allowance (flanged pulleys removed for installation) mm	Min. installation allowance (one pulley flanged) mm	Min. installation allowance (both pulleys flanged) mm	Min. tensioning allowance (any drive) mm
Poly Chain® Carbon™ Volt® 14MGT Poly Chain® GT2 14MGT	640 - 1000	2	33	52	1
	1001 - 1780	3	34	53	1
	1781 - 2540	3	35	53	1
	2541 - 3300	4	35	54	1
	3301 - 4600	5	37	55	1
Poly Chain® Carbon™ / PowerGrip® GT3 5MGT PowerGrip® HTD® 5M	... - 500	1	15	20	1
	501 - 1000	1	15	20	1
	1001 - 1500	2	15	21	1
	1501 - 2260	2	16	21	1
	2261 - 3020	3	16	22	1
PowerGrip® GT3 8MGT PowerGrip® HTD® 8M	... - 500	1	23	34	1
	501 - 1000	1	23	34	1
	1001 - 1500	2	23	35	1
	1501 - 2260	2	24	35	1
	2261 - 3020	3	24	36	1
	3021 - 4020	4	25	36	1
	4021 - 4780	4	26	37	1
	4781 - 6860	5	27	38	1
PowerGrip® GT3 14MGT PowerGrip® HTD® 14M	... - 1000	1	37	60	1
	1001 - 1500	2	37	60	1
	1501 - 2260	2	38	61	1
	2261 - 3020	3	38	61	1
	3021 - 4020	4	39	62	1
	4021 - 4780	4	40	63	1
	4781 - 6860	5	41	64	1
PowerGrip® HTD® 20M	2000 - 2260	2	49	80	1
	2261 - 3020	3	50	80	1
	3021 - 4020	4	51	81	1
	4021 - 4780	4	51	82	1
	4781 - 6860	5	52	83	1
PowerGrip® MXL	90 - 127	1	9	13	1
	128 - 254	1	9	13	1
	255 - 508	1	10	13	1
	509 - 1016	1	10	14	1
	1017 - 1524	2	10	14	1
	1525 - 4572	3	14	14	2
PowerGrip® XL	90 - 127	1	12	19	1
	128 - 254	1	13	19	1
	255 - 508	1	13	19	1
	509 - 1016	1	13	19	1
	1017 - 1524	1	14	20	1
	1525 - 4572	3	15	21	2
PowerGrip® L	314 - 508	1	17	23	1
	509 - 1016	1	18	23	1
	1017 - 1524	2	18	23	1
	1525 - 4572	3	19	25	2
PowerGrip® H	609 - 1016	1	18	26	1
	1017 - 1524	2	18	26	1
	1525 - 4572	3	19	28	2
PowerGrip® XH	1289 - 1524	2	31	51	1
	1525 - 4572	3	32	52	2
PowerGrip® XXH	1778 - 4572	3	42	70	2

Synchronous belt tolerances

Belt width (mm)	Belt width tolerance (mm)		
	Belt lengths 0-838 (mm)	Belt lengths 838-1676 (mm)	Belt lengths 1676+ (mm)
3 - 10	+0.4	+0.4	
	-0.8	-0.8	
12 - 38	+0.8	+0.8	+0.8
	-0.8	-1.2	-1.2
39 - 51	+0.8	+1.2	+1.2
	-1.2	-1.2	-1.6
52 - 64	+1.2	+1.2	+1.6
	-1.2	-1.6	-1.6
65 - 76	+1.2	+1.6	+1.6
	-1.6	-1.6	-2.0
77 - 102	+1.6	+2.0	+2.0
	-1.6	-1.6	-2.0
103 - 178	+2.4	+2.4	+2.4
	-2.4	-2.8	-3.2
178+			+4.8
			-6.4

Belt length (mm)	Belt centre distance tolerance (mm)	
	PowerGrip® / PowerGrip® HTD®	PowerGrip® GT3
127 - 254	± 0.20	± 0.20
255 - 381	± 0.23	± 0.23
382 - 508	± 0.25	± 0.23
509 - 762	± 0.30	± 0.27
763 - 1016	± 0.33	± 0.30
1017 - 1270	± 0.38	± 0.32
1271 - 1524	± 0.41	± 0.36
1525 - 1778	± 0.43	± 0.39
1779	(± 0.43)	± 0.42
	(± 0.025 mm per 254 mm)	(± 0.025 mm per 250 mm)

Use of idlers should be restricted to those cases in which they are functionally necessary. Idlers are normally used to apply tension when centres are not adjustable.

Idlers should be located on the slack side of the belt drive. For inside idlers, grooved pulleys are recommended up to 40 grooves. On larger diameters, flat, uncrowned idlers may be used. Inside idler diameters should not be smaller than the smallest loaded pulley in the system. Outside or backside idlers should be flat and uncrowned; flanges are not recommended. Diameters should generally not be smaller than the smallest loaded pulley in the system. Slack side spring loaded idlers can be used, as long as care is taken to avoid resonant vibration conditions and load reversals.

IDLERS ON V-BELT DRIVES

An idler as used on V-belt drives, is a wheel that is not loaded and may be either a grooved or a flat pulley. Idlers are used on V-belt drives for various reasons:

1. To provide takeup for drives with fixed centre distance.
2. To clear obstructions.
3. To turn corners (as in mule pulley drives).
4. To break up long spans where belt vibration may be a problem.
5. To maintain tension.
6. To act as a clutching device.

Idlers always impose additional bending stresses on the belts. Therefore it is recommended to avoid idlers if possible. If needed at all in the drive, idler dimensions and locations should be designed for a minimum reduction of belt life.

PLACEMENT OF IDLERS ON THE DRIVE

Inside or outside idlers

Idlers may be placed either inside or outside the drive. An inside idler decreases the arc of contact on the adjacent pulleys. Inside idlers can be either grooved or flat. Predator® PowerBand®, Super HC® PowerBand®, Hi-Power® (PowerBand®), Delta Classic™ and Micro-V® will run satisfactorily with flat inside idlers. Grooved inside idlers must always be used with Predator®, Quad-Power® 4 (PowerBand®), Super HC® (MN) and Delta Narrow™.

Inside idler

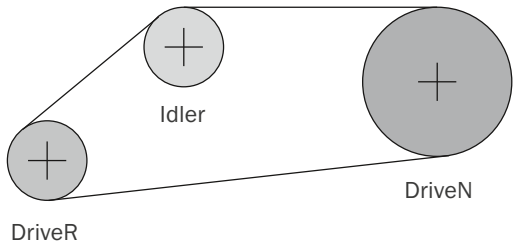

Outside idler

An outside idler increases the arc of contact but the amount of takeup is limited by the span on the opposite side. Outside idlers are always flat pulleys.

NOTE: the use of outside idlers is not recommended for Polyflex® JB™ belt drives.

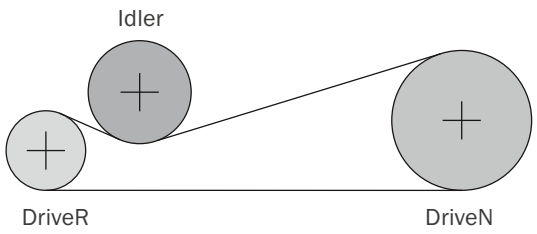

Tight or slack spans

Idlers should be placed, if at all possible, on the slack side of a drive, rather than on the tight side. Springloaded or weighted idlers should always be located on the slack side because the spring force, or weight, can be much less in this position. Also, such idlers should not be used on drives where the load can be reversed (i.e. where the slack side can become the tight side).

Tight side idler

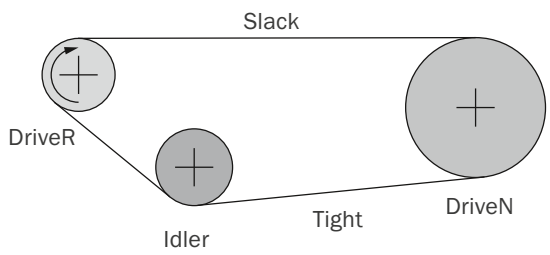

Slack side idler

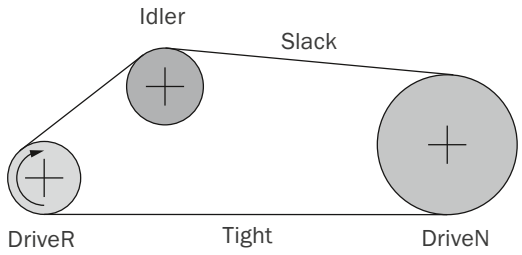

Location of the idler in the span

A grooved inside idler may be located at any point along the span, but preferably so that it results in nearly equal arcs of contact on the two adjacent pulleys.

Equal arcs

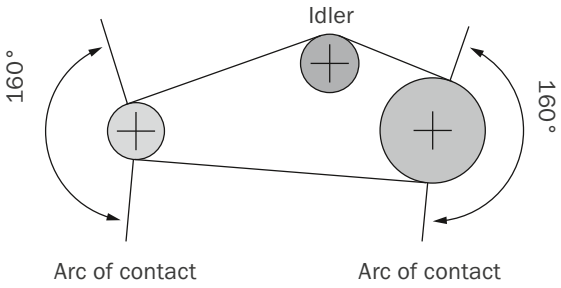

Locating flat idler

A flat idler pulley, whether it is inside or outside should be located as far as is practical from the next pulley the belt is entering. This is because V-belts move back and forth slightly on a flat pulley, and locating it as far away from the next pulley minimises the possibility of the belt entering that pulley in a misaligned condition. The use of flat idler pulleys on long span drives can cause severe belt whip, and should be avoided if possible.

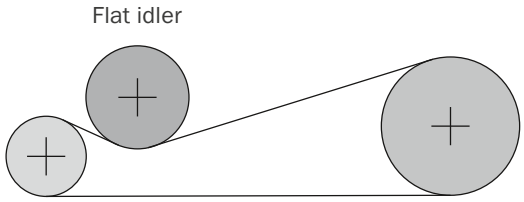

FURTHER INFORMATION

Idler diameters

Inside idlers should be at least as large as the smallest power transmitting pulley. Outside idlers should be at least 50% larger than the smallest power transmitting pulley. Belt power ratings or belt life are reduced significantly when using idlers that are too small.

Belt length

A drive using an idler should be laid out to scale, the extreme installation and takeup positions established and the length measured in each position. Make sure that the belt you select allows sufficient installation and takeup.

Flat idlers

Flat idlers for V-belt drives should not be crowned. If flanging is used, the inside bottom corners should not be rounded since this may cause the belt to climb off the pulley. A general rule to determine the face width of a flat idler (between the flanges if flanged) is to add 1.5 times the nominal belt top width to the face width of the grooved pulley used.

Reduction of power rating

As stated above, the use of an idler (or several idlers) will have its effect on belt performance. So for equal belt life power rating should be reduced. If the above recommendations are used, it is possible to design satisfactory V-belt drives using idlers by multiplying the normal rating by the following factor:

Number of idlers	Multiplier
1	0.91
2	0.86
3	0.81

These factors are approximate. They apply only when idler diameters are in accordance with the above recommendations. If power rating is not reduced to account for an idler, belt life will be reduced. Belt life and power rating are much more reduced, when too small idlers are used, as the extra bending stress increases with decrease in diameter.

Roller Chain Coverage								
Chain	**#35**	**#40**	**#50**	**2-#40**	**#60**	**3-#40**	**2-#50**	**3-#50**
Width (mm)	**12.7**	**17.0**	**21.1**	**31.5**	**26.4**	**45.7**	**39.4**	**57.4**
8M-12	●	●	●					
8M-21			●	●	●	●	●	
8M-36							●	●
8M-62								
14M-20						●	●	●
14M-37								
14M-68								

Roller Chain Coverage												
Chain - ANSI	**#35**	**#40**	**#50**	**2/#40**	**#60**	**3/#40**	**2/#50**	**2/#60**	**#80**	**3/#50**	**#100**	**3/#60**
Width (in)	**0.50**	**0.67**	**0.83**	**1.24**	**1.04**	**1.80**	**1.55**	**1.94**	**1.32**	**2.26**	**1.61**	**2.84**
Chain - British Std	**06B**	**08B**	**10B**	**08B-2**	**12B**	**08B-2**	**10B-2**	**12B-2**	**16B**	**10B-3**	**20B**	**12B-3**
Pitch (mm)	**9.525**	**12.7**	**15.875**	**12.7**	**19.05**	**12.7**	**15.875**	**19.05**	**25.4**	**15.875**	**31.75**	**19.05**
8M-12	●	●	●									
8M-21		●	●	●	●	●	●					
8M-36						●	●	●	●	●		
8M-62										●	●	●
14M-20					●	●	●	●	●	●		
14M-37										●	●	●
14M-68												
14M-90												
14M-125												

Roller Chain Coverage								
Chain ANSI	**2-#120**	**3-#100**	**#180**	**2-#140**	**3-#120**	**#200**	**2-#160**	**2-#180**
Width (in)	**3.79**	**4.43**	**2.88**	**4.07**	**5.58**	**3.12**	**4.85**	**5.48**
Chain - British Std	**24B-2**	**20B-3**	**40B**	**28B-2**	**24B-3**	**40B**	**32B-2**	**40B-2**
Pitch (mm)	**38.1**	**31.75**	**57.15**	**44.45**	**38.1**	**63.5**	**50.8**	**57.15**
19M-100						●	●	●
19M-150								●
19M-200								
19M-250								
19M-300								

Notes
1. Chart Based On Current Poly Chain® GT Carbon™ Power Ratings
2. #35 - #100 Sizes Represent 99.2% Of Total Unit Sales
3. Maximum Chain Size Conversion With 8mm Pitch Belts Based On Diameters: #100
4. Maximum Chain Size Conversion With 14mm Pitch Belts Based On Diameters: #200
5. Chain Ratings Per American Chain Association
6. Chain Width Dimensions Represent Chain Pin Width

Roller Chain Coverage									
2-#60	#80	3-#60	#100	2-#80	#120	3-#80	2-#100	#140	#160
49.3	33.5	72.1	40.9	62.7	50.8	91.9	76.7	54.5	64.5
●	●								
	●	●	●	●					
●	●								
	●	●	●	●	●				
					●	●	●	●	●

Roller Chain Coverage													
2/#80	#120	2/#100	#140	3/#80	#160	#180	2/#120	3/#100	#200	2/#140	3/#120	2/#160	2/#180
2.47	2.00	3.02	2.14	3.62	2.54	2.88	3.79	4.43	3.12	4.07	5.58	4.85	5.48
16B-2	24B	20B-2	28B	16B-3	32B	40B	24B-2	20B-3	40B	28B-2	24B-3	32B-2	40B-2
25.4	38.1	31.75	44.45	25.40	50.8	57.15	38.1	31.75	63.5	44.45	38.1	50.8	57.15
●													
●	●												
	●	●	●	●	●	●	●	●					
							●	●	●	●	●		
											●	●	●

Roller Chain Coverage					
2-#200	2-#240	3-#200	3-#240	4-#200	5-#200
5.94	7.27	8.76	10.7	11.58	14.3
40B-2	48B-2	40B-3	48B-3	40B-4	40B-5
63.5	76.2	63.5	76.2	63.5	63.5
●					
●	●	●			
		●	●	●	
				●	●

DRIVE SURVEY WORKSHEET

CUSTOMER INFORMATION

Distributor: .....

Customer: .....

DRIVE INFORMATION

I.D. of Drive (location, number, etc.).....

Description of DriveN Equipment.....

Manufacturer of DriveN Equipment.....

Kilo Watt Rating of Motor.....Motor Shaft Dia. .....Drive Dhaft Dia.

Speed:

DriveR RPM .....RPM - Measured with Contact or Strobe Tachometer ☐ Yes ☐ No

DriveN RPM.....RPM - Measured with Contact or Strobe Tachometer ☐ Yes ☐ No

Speed Ratio.....Speed Up .....or Speed Down .....

Center Distance:

Minimum .....Nominal .....Maximum .....

Existing Drive Components:

DriveR.....DriveN .....

Belts .....Belt Manufacturer .....

Ambient Conditions:

Temprature..... Moisture .....Oil, etc. .....

Abrasives..... Shock Load .....

Static Conductivity Required? ☐ Yes ☐ No

Maximum Sprocket Diameter (OD) and Width Limitations (for guard clearance):

DriveR: Max. OD..... Max Width .....

DriveN: Max. OD ..... Max. Width .....

Guard Description .....

Motor Mount:

Double Screw Base? ☐ Yes ☐ No

Motor Mounted on Sheet Metal? ☐ Yes ☐ No

Duty Cycle:

Number of Starts/Stops..... times per ..... (hour, day,week,etc...)

ENERGY SAVINGS INFORMATION

Energy Cost per KW-Hour.....

Hours of Operation:

..... Hours per Day .....Days per week .....Weeks per year

Are there any ATEX requirements for the drive? ☐ Yes ☐ No

GATES DESIGN IQ DATA WORKSHEET

Account: .....

Contact: .....

Address: .....

Title: .....

Phone: .....

Fax: .....

Email: .....

DESIGN PARAMETERS

DriveR:

Motor type & description: ..... (servo, stepper, DC, AC, etc.)

Reversing: ☐ Yes ☐ No

Nominal Motor Torque / Power Output: ..... rpm: .....

Max/Peak Motor Torque/Power Output: ..... rpm: .....

Motor Stall Torque (if applicable):

..... Drive Rotation .....(CW / CCW / Rev)

DriveN's / idlers: (Specify appropriate units for each field; in, mm / hp; kw / lb-ft, lb-in, N-m, etc.)

Description	X	Y	Pulley Diameter	Pitch		Sprocket Grooves	Inside / Outside	rpm	Load (driven	Units	Conditions		Shaft Diameter
											#	% Time	
Driver													

Note: For example drive layouts use additional pages as needed

Drive Sketch

Idler details				
	Min position		Max position	
Slot movement	X	Y	X	Y
Spring: ☐ Yes ☐ No				
	Pivot point		Movement angle	
Pivoting movement	X	Y	Min deg	Max deg
Spring: ☐ Yes ☐ No				
Pivot arm radius		inch		mm

SPECIAL REQUIREMENTS

Product Design Life:.....

Belt Life:

.....Hours/Day: .....Hours/Year

Pulley Materials:

Prototype.....Production .....

Belt construction Considerations:

Temperature:..... Moisture: .....

Oil: .....Static Dissipation: .....

Abrasives:.....

Special Requirements: .....

.....

.....

.....

.....

.....

.....

.....

.....

.....

.....

.....

.....

.....

.....

7. HOW GATES MAKES YOUR JOB EASIER

DRIVEN BY POSSIBILITY™

BELT TENSION TESTERS

Improper belt tension, either too high or too low, can cause belt drive problems. Gates recommends that all their belt drives are tensioned correctly, and this can be done by using a tension gauge. Proper tension and installation can extend belt life and reduce costly downtime. Using the Gates design software, the correct belt tension values are available for all Gates belt drives. Several types of tension gauges are available.

Tension Tester (Product No. 7401-00076)

Maximum deflection force: 15 kg (30 lbs). For use with all small V-belt and Synchronous drives, including PowerBand® and Poly Chain® Carbon™ Volt® belt drives.

Double Barrel Tension Tester (Product No. 7401-00075)

Maximum deflection force: 30 kg (66 lbs). For use with all multiple V-belt and large Synchronous drives, including PowerBand® and Poly Chain® Carbon™ Volt® belt drives.

Sonic Tension Meter Model 308C (Product No. 7420-00100)

For extremely accurate belt tension measuring, the Gates Sonic Tension Meter is an electronic device that measures the natural frequency of a free stationary belt span and instantly computes the static belt tension based upon the belt span length, belt width and belt type.

Features:

- Can be used for synchronous and V-belts.
- Uses sound waves instead of force/deflection.
- Results are repeatable with any operator.
- Portable, lightweight and easy to use.
- Fast, calculates tension in seconds.
- Can be used in almost any environment.
- Model 308C runs on a 9V battery.

For more detailed information, e.g. suitability of the tension meter for different belt product lines, please contact your Gates representative.

IMPORTANT NOTE: Gates Sonic Tension Meter should not be used in explosive risk areas (ATEX).

AT-1 Laser Alignment tool (Product No. 7401-10010 – red laser)

A fast and accurate method to measure misalignment is offered by Gates' unique laser alignment device, AT-1 Laser. Mounted in a few seconds, the laser line projected onto the targets allows you to quickly ascertain and correct misalignment. It identifies parallel as well as angular misalignment between the pulleys and is suitable for pulley diameters of 60 mm and larger. It can be used on both horizontally and vertically mounted machines.

- Compact design
- Laser projects a line
- Laser targets, making it easy to align shafts
- Laser line is very easy to read on targets
- Includes a soft protective carrying case

IMPORTANT NOTE: Gates AT-1 Laser Alignment Tool should not be used in explosive risk areas (ATEX).

ANALYTICAL TOOLS

Strobe light

You cannot always see what is happening to a drive while it is in operation. The strobe light allows you to stop the action to get a better idea of the dynamic forces affecting the drive. This instrument is best used after initial diagnosis of the problem because it helps pinpoint the cause. It will help you identify such things as single or dual mode belt span vibration and frame flexure. It is also used to measure and check rotation and vibration movements and to facilitate the measurement of very small objects or hard-to-access places.

Infra-red thermometer

The infrared thermometer allows you to measure belt temperatures more accurately. The device collects the infra-red energy radiated by the belt and transforms it into a temperature value. It offers quick and reliable surface temperature readings without contact.

Sound level meter

A sound level meter allows you to quickly and accurately measure the noise level your drive produces in dB.

Digital multimeter

If belts are failing prematurely, it is possible the DriveN load was underestimated when the drive was designed. Use the digital multimeter to check the actual load being delivered by an electric motor. The clamp-on style allows you to do this safely, without baring wires or worrying about electrical connections. This tool can also be used to troubleshoot vibration problems if they are caused by electrical sources such as arcing switches, power surges or electrical connections.

HOW GATES SUPPORTS YOUR BUSINESS

Behind our leading industrial products is an entire company of professionals, armed with solutions. Whether driven by people, equipment or technology, Gates provides a wide range of services to optimise belt drive performance and deliver the best value to customers in return for their investment in Gates' products.

APPLICATION ENGINEERING SUPPORT

Every day, design engineers, maintenance people, equipment manufacturers and their customers around the world rely on Gates to keep them running smoothly, safely and reliably. Whether driven by people, equipment or technology, Gates provides a wide range of services to optimise belt drive performance and deliver the best value to customers in return for their investment in Gates' products.

For Engineering Support and more, visit gates.com/drivedesign

DRIVE DESIGN SOFTWARE

Gates puts forward two fast and easy resources for selecting and maintaining belt drive systems. DesignFlex® Pro™ and Design IQ™, online drive design and engineering tools, assist designers in quickly selecting optimum drive solutions. With the Gates multilingual DesignFlex® Pro™ programme, you can design a drive in minutes, and get every possible drive solution that fits your design parameters. What's more, you can print, e-mail and create a PDF of the design specifications. Design IQ™ provides a blank slate for designing multipoint and complex serpentine belt drives. Utilising a specific Gates product that you have identified, as well as your drive specifications, the software will calculate belt tension, shaft load, belt length and more.

Design Flex Pro – gates.com/designflex

Design Flex Mobile – gates.com/dfmobile

Design IQ – gates.com/designiq

GATES COST SAVING PROGRAMME

Gates' technical and commercial teams are available to perform plant surveys on customers' premises: Gates' distributors and application engineers conduct performance evaluations and develop a maintenance recommendation plan for energy cost savings. They evaluate current belt drive efficiencies using DesignFlex® Pro™ and the Gates Cost Saving Calculation Tool to develop a preventive maintenance programme maximising the life of all belt drives in your facility.

The energy saving calculations are based on the best information available and represent the typical saving that can be expected from correctly installed drive systems.

Energy Savings Calculator and other resources – info.gates.com/Preventive-Maintenance

GATES E-COMMERCE WEBSITE

By going online, registered Gates distributors can find the most current product information, enter orders 24 hours/day and track orders at any time.

GATES LITERATURE AND WEBSITE

Please consult our website at www.gates.com/europe/pti for specific and updated information on all Gates industrial belt products and our list of available literature. Industrial Power Transmission brochures and leaflets can be downloaded there. Distributors may link up with the Gates European site to supply visitors with updated information on the European Gates organisation.

GATES MANUFACTURING AND DISTRIBUTION IN EUROPE

Gates Power Transmission Industrial has product dedicated production sites in Germany, Poland, Scotland, France and Spain. Distribution is handled from one central warehouse in Ghent (Belgium).

WARRANTY STATEMENT

Gates warrants that its power transmission products will be free from defects in materials and workmanship for the life of the product.

Please note that this warranty is customer's exclusive remedy and does not apply in the event of misuse or abuse of the product. Gates disclaims all other warranties (express or implied) including the implied warranties of fitness for a particular purpose and merchantability. For further details of the Gates Warranty, please see www.gates.com/warranty.

NOTES

NOTES

DRIVEN BY POSSIBILITY™

CUSTOMER EXPERIENCE TEAM

Korte Keppestraat 21/51
B-9320 EREMBODEGEM
Tel. +32 53 76 27 11
Mail: inforequest@gates.com

The manufacturers reserve the right to amend details where necessary.
E2/20216 - © Gates Corporation 2018 - Printed in Belgium - 02/19.